Electrolux

electrolux.com/register

EW7F448WI

EN User Manual | **Washing Machine**

Welcome to Electrolux! Thank you for choosing our appliance.

In our drive to be sustainable, we are reducing paper assets and provide full user manuals online. Access your full user manual at **electrolux.com/manuals**

Get usage advice, brochures, troubleshooting, service and repair information at **electrolux.com/support**

Buy accessories, consumables, and original spare parts for your appliance at **electrolux.com/shop**

Subject to change without notice.

CONTENTS

1. SAFETY INSTRUCTIONS..... 2
2. SAFETY INFORMATION..... 4
3. PRODUCT DESCRIPTION..... 6
4. TECHNICAL INFORMATION..... 7
5. INSTALLATION..... 7
6. CONTROL PANEL..... 18
7. DIAL AND BUTTONS..... 19
8. PROGRAMMES..... 22
9. SETTINGS..... 29
10. BEFORE FIRST USE..... 30
11. DAILY USE..... 30
12. HINTS AND TIPS..... 34
13. TROUBLESHOOTING..... 36
14. CARE AND CLEANING..... 40
15. CONSUMPTION VALUES..... 46
16. QUICK GUIDE..... 48
17. ENVIRONMENTAL CONCERNS..... 51

1. SAFETY INSTRUCTIONS

1.1 Installation

The installation must comply with relevant national regulations.

- Remove all the packaging and the transit bolts including rubber bush with plastic spacer.
- Keep the transit bolts in a safe place. If the appliance is to be moved in the future they must be reattached to lock the drum to prevent an internal damage.
- Always take care when moving the appliance as it is heavy. Always use safety gloves and enclosed footwear.
- Follow the installation instructions supplied with the appliance.
- Do not use the appliance before installing it in the built-in structure due to safety manner.
- Do not install or use a damaged appliance.
- Do not install or use the appliance where the temperature can be less than 0°C or where it is exposed to the weather.
- The floor area on which the appliance is to be installed must be flat, stable, heat resistant and clean.
- Make sure that there is air circulation between the appliance and the floor.

- When the appliance is in its permanent position, check if it is levelled correctly with the aid of a spirit level. If it is not, adjust the feet accordingly.
- Do not install the appliance directly above a floor drain.
- Do not spray water on the appliance and do not expose it to excessive humidity.
- Do not install the appliance where the appliance door cannot be fully opened.
- Do not put a closed container to collect possible water leakage under the appliance. Contact the Authorised Service Centre to ensure which accessories can be used.

1.2 Electrical connection

⚠ **WARNING!**

Risk of fire and electric shock.

- WARNING: This appliance is designed to be installed / connected to a grounding connection in the building.
- Always use a correctly installed shockproof socket.
- Make sure that the parameters on the rating plate are compatible with the electrical ratings of the mains power supply.
- Do not use multi-plug adapters and extension cables.
- Make sure not to cause damage to the mains plug and to the mains cable. Should the mains cable need to be replaced, this must be carried out by our Authorised Service Centre.
- Connect the mains plug to the mains socket only at the end of the installation. Make sure that there is access to the mains plug after the installation.
- Do not touch the mains cable or the mains plug with wet hands.
- Do not pull the mains cable to disconnect the appliance. Always pull the mains plug.

1.3 Water connection

- The inlet water shall not exceed 25 °C.
- Do not cause damage to the water hoses.
- Before connection to new pipes, pipes not used for a long time, where repair work has been carried out or new devices fitted (water meters, etc.), let the water flow until it is clean and clear.
- Ensure that there are no visible water leaks during and after the first use of the appliance.
- Do not use an extension hose if the inlet hose is too short. Contact the Authorised Service Centre for the replacement of the inlet hose.
- When unpacking the appliance, It is possible to see water flowing from the drain hose. This is due to the testing of the appliance with the use of water in the factory.
- You can extend the drain hose to maximum 400 cm. Contact the Authorised Service Centre for the other drain hose and the extension.
- Make sure that there is access to the tap after the installation.

1.4 Use

⚠ **WARNING!**

Risk of injury, electric shock, fire, burns or damage to the appliance.

- Follow the safety instructions on the detergent packaging.
- Do not put flammable products or items that are wet with flammable products in, near or on the appliance.
- Do not wash fabrics which are heavily soiled with oil, grease or other greasy substances. It can damage rubber parts of the appliance. Prewash such fabrics by hand before loading them into the appliance.
- Do not use laundry fragrances to avoid the risk of damaging plastic and rubber parts of the appliance.
- Do not touch the glass door while a programme operates. The glass can get hot.
- Make sure that all metal objects are removed from the laundry.

1.5 Service

- To repair the appliance contact the Authorised Service Centre. Use original spare parts only.
- Please note that self-repair or non-professional repair can have safety

consequences and might void the guarantee.

- The following spare parts are available for at least 10 years after the model has been discontinued: motor and motor brushes, transmission between motor and drum, pumps, shock absorbers and springs, washing drum, drum spider and related ball bearings, heaters and heating elements, including heat pumps, piping and related equipment including hoses, valves, filters and aquastops, printed circuit boards, electronic displays, pressure switches, thermostats and sensors, software and firmware including reset software, door, door hinge and seals, other seals, door locking assembly, plastic peripherals such as detergent dispensers. The duration may be longer in your country. For further information, please visit our website.
- Please note that some of these spare parts are only available to professional repairers, and that not all spare parts are relevant for all models.
- Concerning the lamp(s) inside this product and spare part lamps sold separately: These lamps are intended to withstand extreme physical conditions in household appliances, such as temperature, vibration, humidity, or are intended to signal information about the operational status of the appliance. They are not intended to be used in other applications and are not suitable for household room illumination.

1.6 Disposal

⚠ **WARNING!**

Risk of injury or suffocation.

- Disconnect the appliance from the mains electrical and water supplies.
- Cut off the mains electrical cable close to the appliance and dispose of it.
- Remove the door catch to prevent children or pets from becoming trapped in the drum.
- Dispose of the appliance in accordance with local requirements for the disposal of Waste Electrical and Electronic Equipment (WEEE).

2. ⚠ SAFETY INFORMATION

Before beginning the installation and use of this appliance, carefully read the supplied instructions.
The manufacturer is not responsible for any injuries or damage that are the result of incorrect installation or usage.
Always keep the instructions in a safe and accessible location for future reference.

2.1 Children and vulnerable people safety

- This appliance can be used by children aged from 8 years and above and persons with reduced physical, sensory or mental capabilities or lack of experience and knowledge if they have been given supervision or instruction concerning the use of the appliance in a safe way and understand the hazards involved.

- Children between 3 and 8 years of age and persons with very extensive and complex disabilities shall be kept away from the appliance unless continuously supervised.
- Children of less than 3 years of age should be kept away from the appliance unless continuously supervised.
- Children should be supervised to ensure that they do not play with the appliance.
- Keep all packaging away from children and dispose of it appropriately.
- Keep detergents away from children.
- Keep children and pets away from the appliance when the door is open.
- If the appliance has a child safety device, it should be activated.
- Children shall not carry out cleaning and user maintenance of the appliance without supervision.

2.2 General Safety

- This appliance is for washing domestic-type, machine-washable laundry only.
- This appliance is designed for single household domestic use in an indoor environment.
- This appliance may be used in offices, hotel guest rooms, bed & breakfast guest rooms, farm guest houses and other similar accommodation where such use does not exceed (average) domestic usage levels.
- Do not change the specification of this appliance.
- The appliance maximum load is 8.0 kg. Do not exceed the maximum load of each programme (refer to the “Programmes” chapter).
- The operating water pressure at the water entry point from the outlet connection must be between 0.5 bar (0.05 MPa) and 10 bar (1.0 MPa).
- The ventilation opening in the base must not be covered by a carpet, mat, or any floor covering.

- The appliance must be connected to the water mains using the new supplied hose sets, or other new hose sets supplied by the Authorised Service Centre.
- Old hose sets must not be reused.
- If the mains power supply cable is damaged, it must be replaced by the manufacturer, its Authorised Service Centre or similarly qualified persons to avoid an electrical hazard.
- Before any maintenance operation, deactivate the appliance and disconnect the mains plug from the socket.
- Do not use high pressure water sprays and/or steam to clean the appliance.
- Clean the appliance with a moist cloth. Use only neutral detergents. Do not use abrasive products, abrasive cleaning pads, solvents or metal objects.

3. PRODUCT DESCRIPTION

3.1 Appliance overview

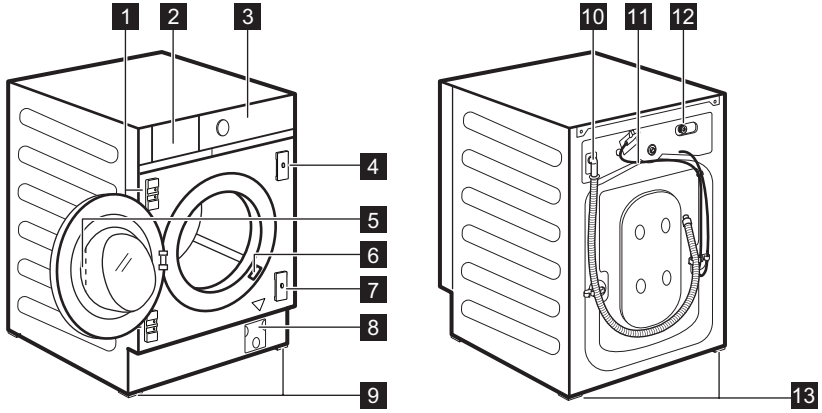

1 Hinge supports
2 Detergent dispenser
3 Control panel
4 Magnetic plate
5 Door handle
6 Rating plate
7 Plate with rubber beater
8 Drain pump filter
9 Front feet for levelling the appliance
10 Drain hose
11 Mains cable
12 Inlet hose connection
13 Back feet for levelling the appliance

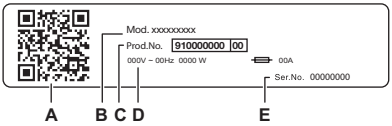

The rating plate reports:

A. QR code
B. Model name
C. Product number
D. Electrical ratings
E. Serial number

Scan the **QR code** on the appliance to register your product and get the most out of it.

- Access your appliance details, documentation and articles on how to use the best features (User Manual also available at **electrolux.com/manuals**)
- Get usage advice, troubleshooting, service and repair information (also available at **electrolux.com/support**)
- Buy accessories, Consumable and Original Spare parts for you appliance (also available at **electrolux.com/shop**)

4. TECHNICAL INFORMATION

Dimension	Width/ Height/ Total depth	59.6 cm /81.9 cm /55.3 cm
Electrical connection	Voltage Overall power Fuse Frequency	230 V 2100 W 10 A 50 Hz
Level of protection against ingress of solid particles and moisture ensured by the protective cover, except where the low voltage equipment has no protection against moisture		IPX4
Water supply pressure	Minimum Maximum	0.5 bar (0.05 MPa) 10 bar (1.0 MPa)
Water supply 1)		Cold water
Maximum Load	Cotton	8.0 kg

1) Connect the water inlet hose to a water tap with a 3/4" thread.

5. INSTALLATION

WARNING!

Refer to Safety chapters.

5.1 Be prepared for installation

It is recommended that installation is carried out by two persons.

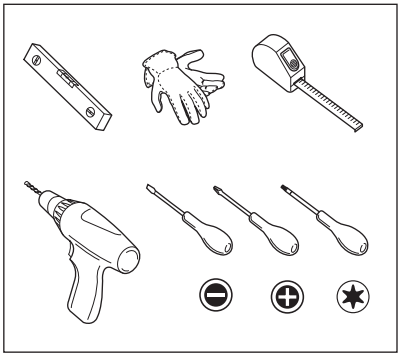

5.2 The appliance is equipped with ...

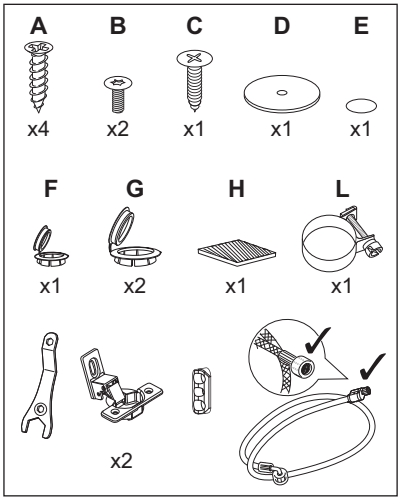

5.3 Unpacking

> ⚠ **WARNING!**
> Use the gloves.

> ⚠ **WARNING!**
> Remove all the packaging and the transit bolts before installing the appliance.

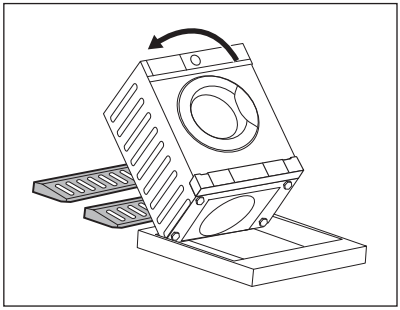

1. Put two packaging elements on the floor under the appliance.

> ⚠ **WARNING!**
> It is strongly recommended that this action is carries out by two persons.

2. Carefully put the appliance down on its rear side.

> ⓘ
> Make sure not to damage the hoses.

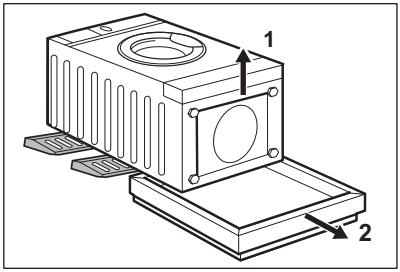

3. Remove the protection from the bottom.

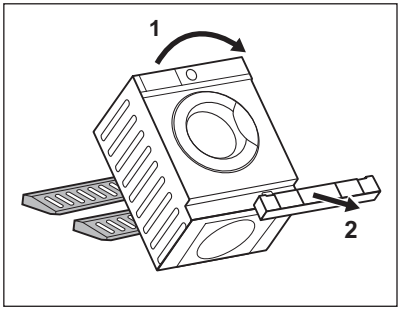

4. Return the appliance in vertical position and remove the socket protection.

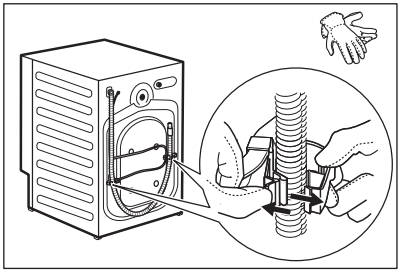

5. Remove the power supply cable and the drain hose from the hose holders.

> ⓘ
>
> It is possible to see water flowing from the drain hose. This is due to the testing with water of the appliance in factory.

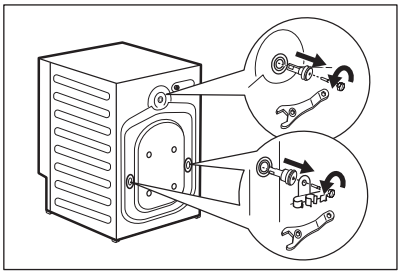

6. Remove the three bolts, the hose holders and plastic spacers by using the spanner.

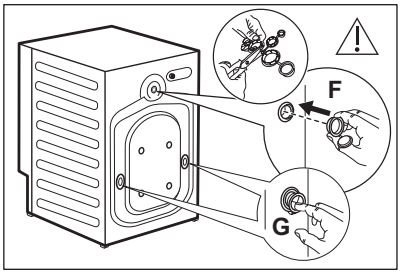

7. Close the holes with the plastic caps you find in the user manual bag. Put the smallest cap **F** in upper hole and the two bigger caps **G** in lower holes.

ⓘ

We recommend that you keep the packaging and the transit bolts for any movement of the appliance.

ⓘ

Accessories delivered with the appliance may vary depending on the model.

5.4 Positioning and levelling

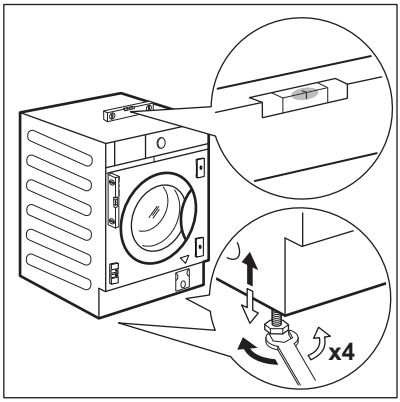

1. Install the appliance on a flat hard floor.

⚠ **WARNING!**

Make sure that carpets do not stop the air circulation below the appliance.

ⓘ

Bring the appliance near the furniture recess before levelling it. For more details, refer to paragraph "Building in".

2. Loosen or tighten the feet to adjust the level.

ⓘ

A correct adjustment of the appliance level prevents the vibration, noise and the movement of the appliance when in operation.

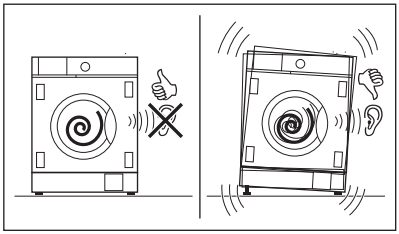

The appliance must be level and stable.

⚠ **CAUTION!**

Do not put cardboard, wood or equivalent materials below the appliance feet to adjust the level.

5.5 Hose and cable connection

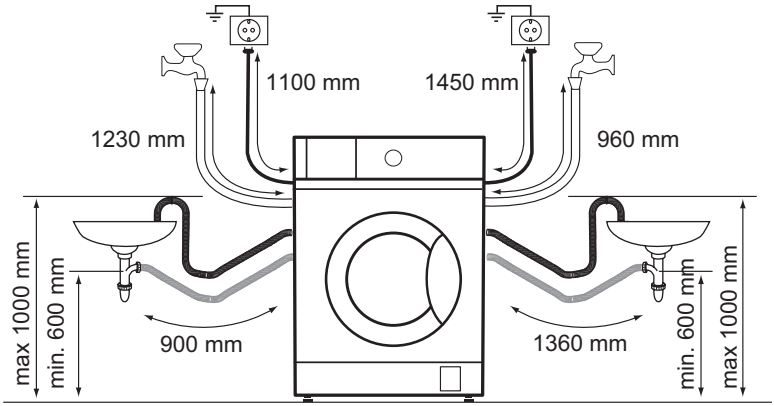

The inlet hose

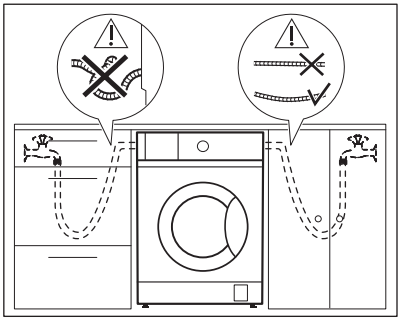

1. Remove the inlet hose from inside the drum.
2. To connect the water inlet hose towards the proper direction and with the proper inclination, check the position of the water tap before connecting it to the back of the appliance.

> ⓘ
> Make sure the hose is nor kinked, squashed but neither tensed.

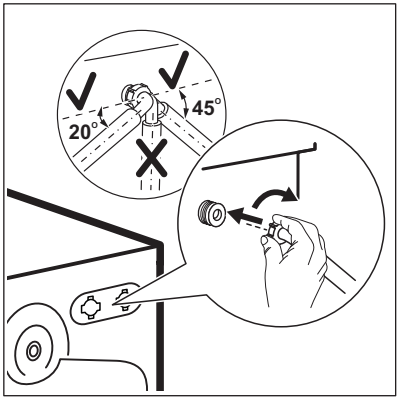

3. Connect the hose to the back of the appliance. Do not turn the inlet hose downwards, but turn it left or right depending on the position of your water tap.
4. Loosen the ring nut to fix it in the correct position.

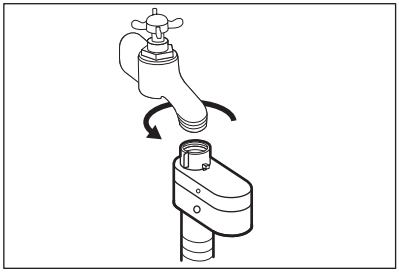

5. Connect the water inlet hose to the cold water tap with 3/4 thread.

> ⚠ **WARNING!**
>
> The inlet water shall not exceed 25 °C.

> ⚠ **WARNING!**
>
> Make sure that there are no leaks from the couplings.

> ⓘ
>
> Use the hose supplied with appliance.

> ⓘ
>
> Do not use an extension hose if the inlet hose is too short. Contact the Authorised Service Centre for an inlet hose replacement.

Water drainage

The drain hose can be connected:

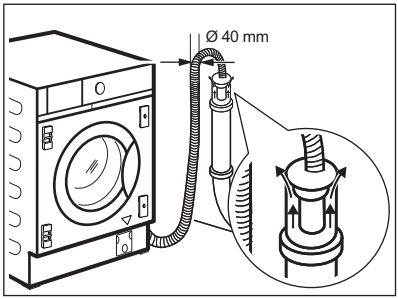

To a stand pipe with vent-hole
Directly into a drain pipe at a height of not less than 60 cm (23.6”) and not more than 100 cm (39.3”).
The end of the drain hose must always be ventilated , i.e. the inner diameter of the drain pipe (min. 40 mm - min. 1.6”) must be larger than the external diameter of the drain hose.

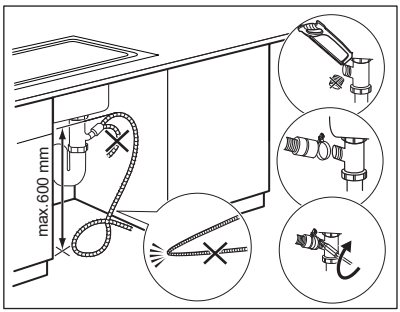

To an aired sink spigot
Put the drain hose in the spigot and tighten it with the supplied cable tie **L**.
Make sure that the drain hose makes a loop to prevent particles going into the appliance from the sink.

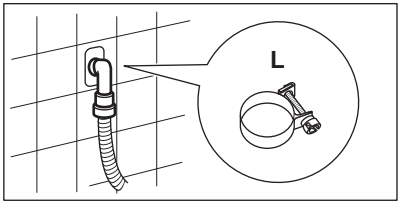

To an aired wall-pipe
Directly to a built-in drain pipe in the room wall and tighten it with the supplied cable tie **L**.

ⓘ

You can extend the drain hose to maximum 400 cm. Contact the service centre for the other drain hose and the extension.

5.6 Building in

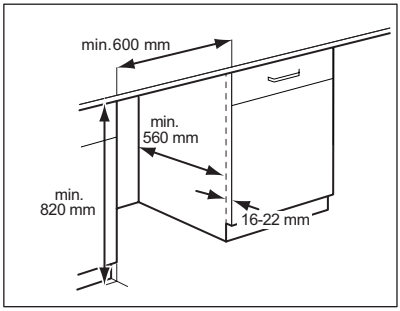

This appliance has been designed to be built into the kitchen furniture. See the minimum recess dimensions in the drawings.

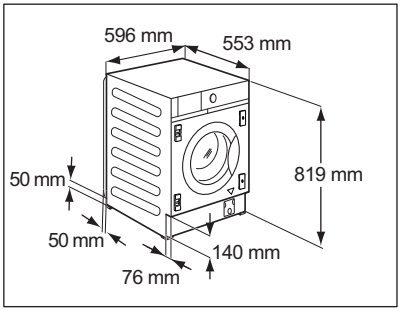

ⓘ

If hoses run behind the appliance, make sure that nothing closes the small recess indicated with the measures 50 x 50 mm.

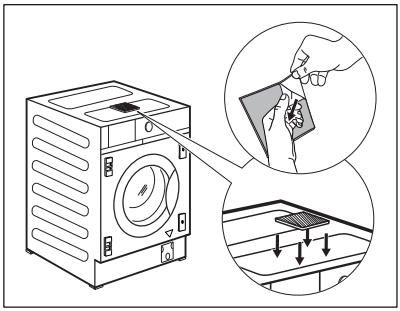

The appliance is also equipped with an adhesive sponge pad **H** that you can find inside the drum. Attach it on the top of the appliance where indicated in the drawing.
When levelling the appliance under the furniture, DO NOT squeeze the sponge pad.

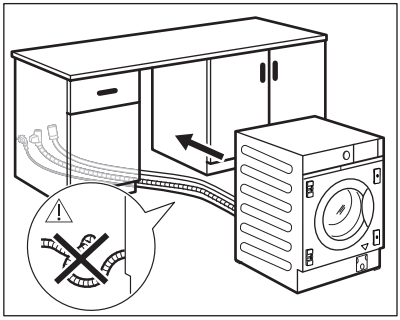

Before proceeding with appliance building in, bring it near the recess and preposition the inlet hose, the drain hose and the mains cable.

> ⚠ **WARNING!**
>
> Make sure they are not kinked or squashed.

5.7 Preparation and assembly of the cupboard door

The dimensions of the cupboard door should be:

- width min. 595 - max. 598 mm;
- thickness 16-22 mm.

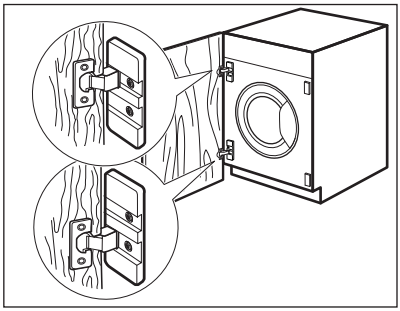

Factory pre setting
The appliance is originally pre set for the assembly of a cupboard door opening from right to left.

> ⓘ
>
> The best solution would be to screw the upper hinge to the upper hole of the top plate and the lower hinge to the lower hole of the bottom plate.

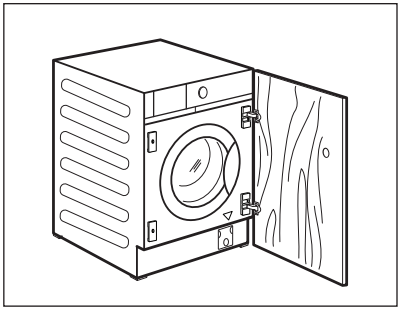

Reversibility of the cupboard door
Carry out the cupboard door reversibility before the appliance is built in completely.

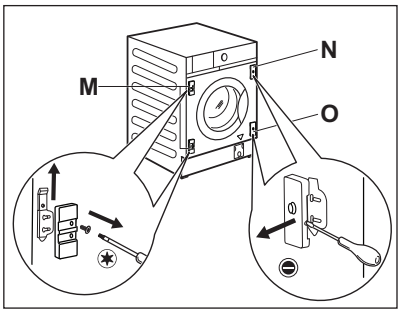

If the cupboard door has to be opened from left to right, invert the position of the hinge supports **M** with the magnetic plate **N** and lower plate **O**.

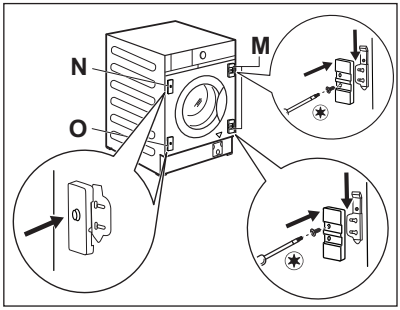

ⓘ
Make sure that the plate with magnet is on the upper position.

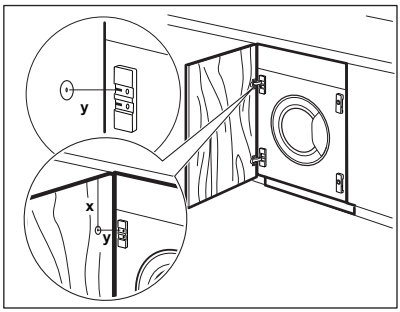

Cupboard door preparation

ⓘ
For countersinking the door, it is recommended to call a professional.

Align the cupboard door to the furniture correctly. Measure the distance **X** to fix the height of the hole to countersink the upper hinge. The centre of the hole **Y** should be at the same height of the stroke on the hinge support.

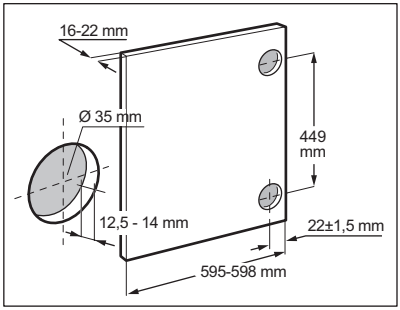

Set the position of the lower hole respecting dimensions and distances shown in the drawing (449 mm).
Countersink the holes.

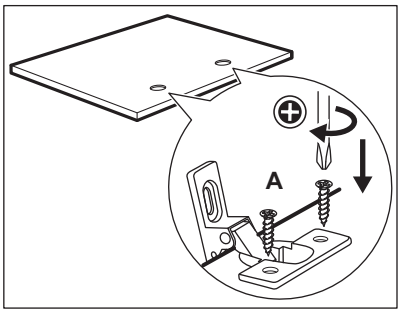

Hinges
To mount the hinges it is necessary to drill two holes (dia. 35 mm, depth 12.5 - 14 mm depending on the depth of cupboard door) on the inner side of the door.
The hinges will be fixed to the door by means of the four supplied screws **A**.

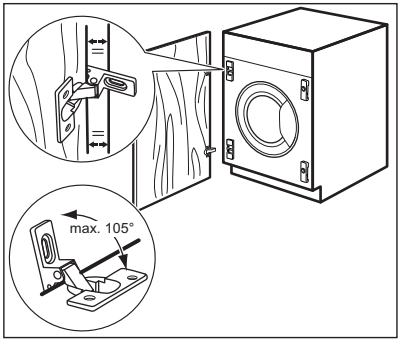

ⓘ

To align the door perfectly, make sure that the edge of cupboard door is parallel with the appliance edge and to respect the proper opening angle (max. 105 °).

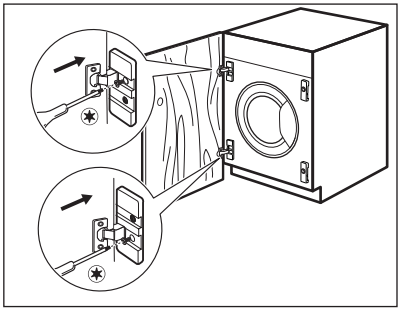

Mounting the door
Fix the hinges to the hinge supports on the appliance by means of the two supplied screws **B**.

ⓘ

The hinges can be adjusted to compensate for possible uneven thickness of the door.

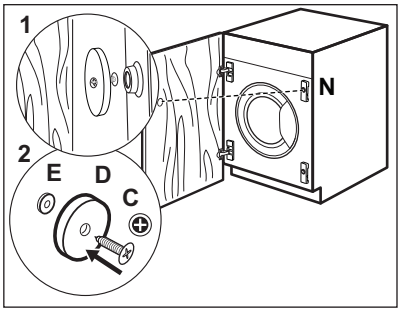

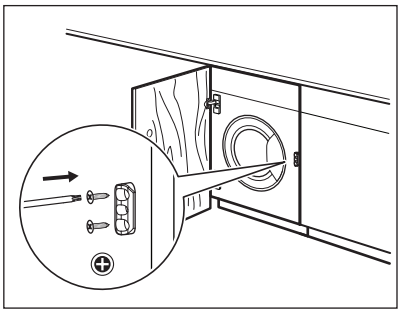

Counter-magnet
The appliance is pre set for a magnetic closure. For a correct closure:

1. Position the screw **C** and the counter-magnet **D** on the magnetic plate **N**. Lean the cupboard door against the screw until it leaves a mark.
2. Open the cupboard door and screw the counter-magnet **D** (steel disk + rubber ring **E**) with the screw **C** in the inner side of the cupboard door, where the screw left the mark as described in the first step.

ⓘ

Flexible machine stopper
The supplied plastic stopper can be only installed when the appliance installation is complete, to avoid movement outward. Fix it on the furniture, near the front panel taking as reference height the middle of the door, **on the opposite side of the hinges**.

5.8 Electrical connection

At the end of installation you can connect the mains plug to the mains socket.

The rating plate and the 'Technical Data' chapter indicate the necessary electrical ratings. Make sure that they are compatible with the mains power supply.

Check that your domestic electrical installation can take the maximum load required, also taking into account any other appliances may also be in use.

Connect the appliance to an earthed socket.

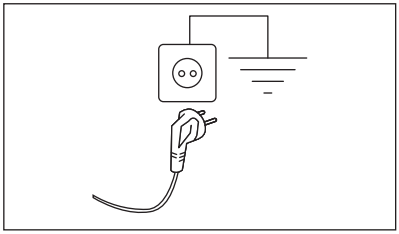

The power supply cable must be easily accessible after installing the appliance.

For any electrical work required to install this appliance, contact our Authorised Service Centre.

The manufacturer does not accept any responsibility for damage or injury through failure to comply with the above safety precaution.

6. CONTROL PANEL

6.1 Control panel description

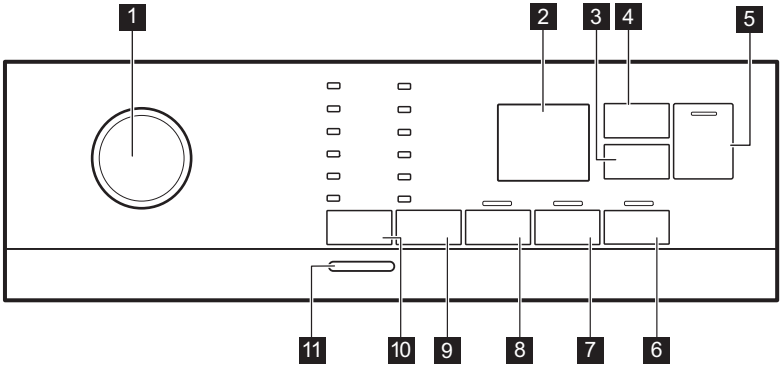

The permanent options are set by holding pressed the relative button for at least 3 seconds.

1 Programme dial
2 Display
3 Delay Start touch button
4 Time Manager touch button
5 Start/Pause touch button
6 Plus Steam touch button and permanent Child Lock option 3s
7 Soft Plus touch button and permanent Extra Rinse option 3s
8 Prewash touch button and permanent Stain option 3s
9 Spin reduction options touch button
- Rinse Hold option
- No spin option
- Quiet option

10 Temperature touch button
11 On/Off push button

6.2 Display

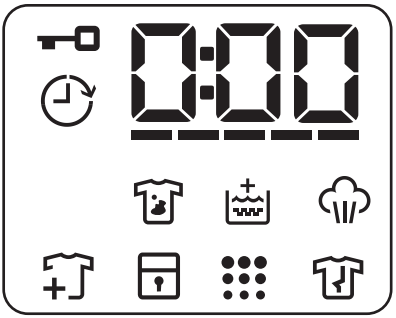

	Door locked indicator.
	Delay start indicator.
0:00	The digital indicator can show: • Reset position (– – –). • Programme duration (e. g. 2:40). • Delay time (e. g. 2h). • Cycle end (0:00). • Warning code (e.g. E20). • Error indicator (– – –). • Indication of total operating hours of the appliance. Refer to the 'Operating hours counter' section in the 'Settings' paragraph for more details.
-----	Time Manager indicator.
	Anti-stain indicator.
	Extra Rinse indicator.
	Steam phase indicator.
	Add garments indicator. it lights at the beginning of the washing phase, when it is still possible to pause the appliance and add more laundry.
	Child safety lock indicator.
	Machine clean indicator. This is a recommendation to perform the drum cleaning.

7. DIAL AND BUTTONS

7.1 Introduction

The options/functions are not available with all washing programmes. Check the compatibility between options/functions and washing programmes in the "Programme Chart". An option/function can exclude another one, in this case the appliance doesn't allow you to set incompatible options/functions.

7.2 On/Off

Press this button for a few seconds to activate or deactivate the appliance. Two different tunes sound while switching the appliance on or off.

As the Stand-by function automatically deactivates the appliance after several minutes to reduce the energy consumption, you may need to activate the appliance again.

For more details, refer to Stand-by paragraph in Daily Use chapter.

7.3 Programme dial

For selecting the desired washing programme. Refer to 'Programmes' chapter for more details.

The position • is a "Reset" function, which stops and resets the running programme. The display shows empty dashes to indicate that no programme was selected.

7.4 Temperature

When you select a washing programme, the appliance automatically proposes a default temperature.

The indicator Cold = cold water.

The indicator of the set temperature comes on.

7.5 Spin

When you set a programme, the appliance automatically sets the default spin speed allowed for each programme.

By means of this button, you can change the default spin speed or set one of the additional spin options:

- **Rinse Hold** . The related indicator comes on.
  The final spin is not performed. The water of the last rinse is not drained out to prevent the fabrics from creasing. The washing programme ends with water in the drum.
  The door stays locked and the drum turns regularly to reduce creasing. You must drain the water to unlock the door.

  If you touch the Start/Pause button, the appliance performs the spinning phase and drains the water.
- **No spin** . The related indicator comes on.
  Set this option to deactivate all spin phases. The appliance performs only the draining phase of the selected washing programme. Set this option for very delicate fabrics. The rinse phase uses more water for some washing programmes
- **Quiet** . The related indicator comes on.
  The intermediate and the final spinning phases are suppressed and the programme ends with water in the drum. This helps to reduce creasing. The door stays locked. The drum turns regularly to reduce creasing. You must drain the water to unlock the door.
  As the programme is very quiet, it is suitable for use at night time when cheaper electricity tariffs are available. In some programmes the rinses are performed with more water.

  If you touch the Start/Pause button, the appliance performs only the draining phase.

> The appliance empties the water out automatically after approximately 18 hours.

7.6 Prewash

With this option you can add a prewash phase to a washing programme.

The corresponding indicator above the touch button illuminates.

Use this option to add a pre-wash phase at 30 °C before the washing phase.

This option is recommended for heavily soiled laundry, especially if containing sand, dust, mud and other solid particles.

> The option can increase the programme duration.

7.7 Permanent Anti-stain 3s

This option adds an anti-stain phase to the programme. Use this option for laundry with hard stains to remove.

To **activate/deactivate** this option, hold the Prewash button pressed for 3 seconds until the indicator **comes on/goes off** on the display.

Pour the stain remover into compartment .

> This option increases the programme duration.
> This option is not available with a temperature lower than 40 °C.

7.8 Permanent Soft Plus

Set this option to optimise the fabric softener distribution and improve fabric softness.

Recommended when you use fabric softener.

This option increases the programme duration.

The corresponding indicator above the touch button illuminates and also stays permanently on during next cycles until this option is deactivated.

7.9 Permanent Extra Rinse 3s

With this option you can permanently have an extra rinse when you set a new programme.

To **activate/deactivate** this option, hold the Soft Plus button pressed for 3 seconds until the indicator **comes on/goes off** on the display.

When it is activated, the appliance will default to this option after you switch it off or change/reset the programme.

This option increases the programme duration.

7.10 Plus Steam

This option adds a steam phase followed by a short anti-crease phase at the end of the washing programme.

The steam phase reduces fabric creasing and facilitates the fabric ironing.

The corresponding indicator above the touch button illuminates.

The indicator is steady on during steam phase.

This option can increase the programme duration.

When the programme stops the display shows 0:00, the indicator goes off and the indicator and the Start/Pause led are steady on. The drum performs smooth movements for about 30 minutes to keep the steam benefit. By touching any button the anti-crease movements stop and the door unlocks, the appliance proposes again the previous set programme.

To interrupt the anti-crease phase, you can also:

- Press the On/Off button for a few seconds to activate or the deactivate the appliance.
- Turning the programme dial in another position.

A small laundry load helps to reach better results.

7.11 Child Lock 3s

With this option you can prevent children from playing with the control panel.

To **activate/deactivate** this option, hold the Plus Steam button pressed until the indicator **comes on/goes off** on the display.

When it is activated, the appliance will default to this option after you switch it off or change/reset the programme. If you press any button, the indicator blinks to indicate that the buttons are disabled.

The Child Lock function may not be available for a few seconds after switching the appliance on.

7.12 Delay Start

With this option you can delay the start of a programme to a more convenient time.

Touch the button repeatedly to set the required delay. The time increases in steps of 1 hour up to 20 hours.

The display shows the indicator and the selected delay time. After touching the Start/Pause button, the appliance begins the countdown and the door is locked.

7.13 Time Manager

With this option you can reduce the programme duration depending on the load size and the degree of soiling.

When you set a washing programme, the display shows the default duration and ----- dashes.

Touch Time Manager button to reduce the programme duration according to your needs. The display shows the new programme duration and a number of dashes will decrease accordingly:

---- suitable for a full load of normally soiled garments.

--- a quick cycle for a full load of lightly soiled garments.

-- very quick cycle for a smaller lightly soiled load (max. half load recommended).

- the shortest cycle to freshen up a small amount of laundry.

The Time Manager is available only with the programmes in the table.

indicator	Cottons	Synthetics
----- 1)	■	■
----	■	■
---	■	■
-- 2)	■	■
- 2)	■	■

1) Default duration for all programmes.

2) This level of Time Manager option is not available in 90°C.

Time Manager with steam programmes

When setting a steam programme, this button allows to chose three steam levels and the programme duration is reduced accordingly:

- --- : maximum.
- -- : medium.
- - : minimum.

ⓘ

In some appliances the programme duration is reduced without showing any dashes.

7.14 Start/Pause ▷‖

Touch the Start/Pause ▷‖ button to start, pause the appliance or interrupt a running programme.

ⓘ

The icon means that you can pause the cycle and add or remove garments. Read the 'Opening the door - Adding garments' section for more details.

8. PROGRAMMES

8.1 Programme Chart

Programme Default temperature Temperature range	Reference spin speed Spin speed range	Maximum load	Programme description (Type of load and level of soiling)
Washing programmes			

Programme Default temperature Temperature range	Reference spin speed Spin speed range	Maximum load	Programme description (Type of load and level of soiling)
Eco 40-60 **1)**	1400 rpm (1400- 800 rpm)	8.0 kg	**White cotton and fast-coloured cotton**. Normally soiled items. The energy consumption decreases and the time of the washing programme is extended, ensuring good washing results.
Cottons 40 °C 90 °C - Cold	1400 rpm (1400- 800 rpm)	8.0 kg	**White cotton and coloured cotton**. Normally, heavily and lightly soiled items.
Synthetics 30 °C 60 °C - Cold	1200 rpm (1200 - 800 rpm)	3.0 kg	**Synthetic items or mixed fabric items**. Normally soiled items.
Delicates 30 °C 40 °C - Cold	1200 rpm (1200- 800 rpm)	2.0 kg	**Delicate fabrics such as acrylics, viscose and mixed fabrics requiring gentler washing**. Normally and lightly soiled items.
Hygiene 60 °C	1400 rpm 1400 rpm - 800 rpm	8.0 kg	White cotton items. This high-performance wash programme combined with steam vapour, removes more than 99,99% of bacteria and viruses**2)** keeping the temperature above 60°C throughout the washing phase; with an additional action on the fibers thanks to a vapour phase, an enhanced rinsing phase ensures a proper removal of detergent and micro-organism residues. This programme ensures also a proper reduction of pollens/allergenic items.

Programme Default temperature Temperature range	Reference spin speed Spin speed range	Maximum load	Programme description (Type of load and level of soiling)
Steam programmes The Steam programmes can be used for reducing wrinkles and odours on garments (such as cottons, synthetics, mixed fabrics, including delicates) that just need to be refreshed, in a short time, avoiding washing. The fabric fibres are relaxed and afterwards ironing becomes effortless. When the cycle is completed, quickly remove the laundry from the drum. The cycle duration can be reduced till 15 minutes by means of the Time Save option. **DO NOT** set this mode with the following type of items: • Items that are not suitable for tumble drying. • Items with label "Dry clean only". Do not use any detergent! The Steam programmes do not remove particularly intense odour and do not perform any hygienic cycle. After the steam treatment the laundry can be humid. Hang items out for a few minutes. **The fragrance (Electrolux Steam Fragrance)** The Electrolux Steam Fragrance allows you to refresh even your delicate clothes, removing wrinkles and adding freshness with a gentle fragrance developed exclusively by **Electrolux**. By refreshing your garments with steam, rather than running full wash cycles, you will keep your clothes looking and feeling new longer. You can even safely use the fragrance with Cashmere and Steam programmes - if they are available - for delicate fabrics like cashmere and wool. When treating smaller load reduce the fragrance dosage and the cycle duration: in only fifteen minutes, your clothes will regain that "just washed" feeling. Read carefully the instructions supplied with the fragrance. **DO NOT**: • Tumble dry the garments treated with fragrance. Its benefit would evaporate. • Use the fragrance with different purposes than those here described. • Use the fragrance on new garments. New garments may contain residual finishing compounds which are not compatible with it. The fragrance is available on **Electrolux** web shop or by authorised dealer.			
FreshScent	-	1.0 kg	**Cottons, Synthetics, Delicates.** Short and gentle steam programme to refresh even your very delicate garments, including very delicate garments with sequins, lace etc. When treating smaller loads, the programme duration can be further reduced by means of the Time Manager option. **WARNING!** Do not use this programme with wool and garments labelled as dry-clean only. **WARNING!** Do not use any detergent!
Special programmes			

Programme Default tempera-ture Temperature range	Reference spin speed Spin speed range	Maxi-mum load	Programme description (Type of load and level of soiling)
Spin/Drain	1400 rpm (1400 - 800 rpm)	8.0 kg	**All fabrics, except woollens and delicate fabrics**. To spin the laundry and to drain the water in the drum.
Rinse	1400 rpm (1400- 800 rpm)	8.0 kg	**All fabrics, except woollens and very delicate fabrics.** Programme for rinsing and spinning the laundry. The default spin speed is the one used for cotton programmes. Reduce the spin speed according to the type of laundry. If necessary, set the Extra Rinse option to add rinses. With a low spin speed, the appliance performs delicate rinses and a short spin.
Additional washing programmes			
Duvet 40 °C 60 °C - Cold	800 rpm	3.0 kg	**Single synthetic blanket, padded clothes, duvets, down jackets** and similar items.
Rapid 14min 30 °C	800 rpm	1.5 kg	**Synthetic and mixed fabric** items. Lightly soiled items and items to freshen up.
Sport 30 °C 40 °C - Cold	1200 rpm (1200- 800 rpm)	3.0 kg	**Synthetic sportswear**. Intensive short cycle to deeply wash sportswear.

Programme Default temperature Temperature range	Reference spin speed Spin speed range	Maximum load	Programme description (Type of load and level of soiling)
Outdoor 30 °C 40 °C - Cold	1200 rpm (1200- 800 rpm)	2.0 kg[3)] 1.0 kg[4)]	Do not use fabric softener and make sure that there is no softener residue in the detergent dispenser. **Synthetic sport items.** This programme is designed to gently wash modern outdoor sportswear and is also suitable for gym, cycling or jogging clothes or similar. The recommended laundry load is 2.0 kg. **Waterproof, waterproof-breathable and water repellent fabrics.** This programme can also be used as a water repellent restoring phase, specifically tailored for treating clothes with a hydrophobic coating. To perform the water repellent restoring phase, proceed as follows: • Pour the washing detergent in the compartment . • Pour a special water repellency restorer for fabric into the softener compartment of the drawer . • Reduce the laundry load to 1.0 kg. To further improve the water repellent restoring action, dry the laundry in a tumble dryer by setting the Outdoor drying programme (if available and if the garment care label permits tumble drying).
Denim 30 °C 40 °C - Cold	800 rpm (1200 - 800 rpm)	3.0 kg	**Special programme for Denim clothing with delicate washing phase to minimize colour fading and marks**. For better care a reduced load size is recommended.

Programme Default temperature Temperature range	Reference spin speed Spin speed range	Maximum load	Programme description (Type of load and level of soiling)
Wool/Silk 40 °C 40 °C - Cold	1200 rpm (1200 - 800 rpm)	1.5 kg	**Machine washable wool, hand washable wool and other fabrics** with «hand washing» care symbol**5)**.

1) According to Commission Regulation EU 2019/2023, this programme at 40 °C is able to clean normally soiled cotton laundry declared to be washable at 40 °C or 60 °C, together in the same cycle.

For the reached temperature in the laundry, the programme duration and other data, please refer to 'Consumption Values' chapter.
The most efficient programmes in terms of energy consumption are generally those that perform at lower temperatures and longer duration.

2) Tested for Staphylococcus aureus, Enterococcus faecium, Candida albicans, Pseudomonas aeruginosa and MS2 Bacteriophage in external test performed by Swissatest Testmaterialien AG in 2021 (Test Report No. 202120117).

3) Washing programme.

4) Washing programme and water repellent phase.

5) During this cycle the drum rotates slowly to ensure a gentle wash. It can seem that the drum doesn't rotate or doesn't rotate properly, but this is normal for this programme.

Programme options compatibility

Programme	Spin	No Spin			Prewash**1)**	Stains **2)**	Extra Rinse	Soft Plus	Plus Steam	Delay Start	Time Save
Eco 40-60	■		■							■	
Cottons	■	■	■	■	■	■	■	■	■	■	■
Synthetics	■	■	■	■	■	■	■	■	■	■	■
Delicates	■	■	■	■			■	■		■	
Hygiene	■	■	■		■	■	■	■	■	■	
FreshScent										■	■
Spin/Drain	■	■**3)**								■	
Rinse	■	■	■				■			■	
Duvet	■	■						■		■	

Programme	Spin	No Spin			Prewash[1]	Stains [2]	Extra Rinse	Soft Plus	Plus Steam	Delay Start	Time Save
Rapid 14min	■	■	■							■	
Sport	■	■	■		■		■			■	
Outdoor	■	■	■				■			■	
Denim	■	■	■	■		■	■	■	■	■	
Wool/Silk	■	■	■							■	

1) Prewash and Stains cannot be selected together.
2) This option is not available with temperature lower than 40 °C.
3) If you set the No Spin option, the appliance performs draining only.

Suitable detergents for each programme

Programme	Universal powder[1]	Liquid Universal	Liquid for coloureds	Delicates woollens	Special
Eco 40-60	▲	▲	▲	--	--
Cottons	▲	▲	▲	--	--
Synthetics	▲	▲	▲	--	--
Delicates	--	--	--	▲	▲
Hygiene	▲	▲	--	--	▲
Duvet	--	--	--	▲	▲
Rapid 14min	--	▲	▲	--	--
Sport	--	▲	▲	--	▲
Outdoor	--	--	--	▲	▲
Denim	--	--	▲	▲	▲
Wool/Silk	--	--	--	▲	▲

1) At temperature higher than 60 °C the use of powder detergent is recommended.

▲ = Recommended | -- = Not recommended

8.2 Woolmark Premium Wool Care - Blue

The wool wash cycle of this machine has been tested and approved by The Woolmark Company for the washing of wool garments labelled as «hand wash» provided that the products are washed according to the instructions on the garment label and those issued by the manufacturer of this washing machine.
1380

9. SETTINGS

9.1 Acoustic signals

This appliance has different acoustic signals, that operate when:

- You activate the appliance (special short tune).
- You deactivate the appliance (special short tune).
- You touch the buttons (click sound).
- You make an invalid selection (3 short sounds).
- The programme is completed (sequence of sounds for about 2 minutes).
- The appliance has a malfunction (sequence of short sounds for about 5 minutes).

To **activate/deactivate** the acoustic signals when the programme is completed, touch the Temp. and the Spin buttons simultaneously for about 2 seconds. The display shows On or Off.

ⓘ

If you deactivate the acoustic signals, they continue to operate when the appliance has a malfunction.

9.2 Operating Hours Counter

It is possible to visualise the total operating time of the appliance in hours, starting from the first switching on. This value will count operating time of the cycles (does not include pauses, delayed start time). To visualise this value, proceed as follows:

1. Switch the appliance on by pressing On/Off button.
2. Turn the programme knob to the Eco 40-60 programme (1st position clockwise).
3. Press and hold the Spin and Temperature buttons for some seconds (within 10 seconds after the switching on. After these 10 seconds, the key combination activates and deactivates the acoustic signals).
4. After 3 seconds the total hours operated by the appliance are shown in the display: e.g. 1276 hours, the display shows the text Hr for 2 seconds, 12 (thousands and hundreds) for 2 seconds and 76 (tens and units).

ⓘ

If the procedure does not work (due to timeout, wrong programme dial position or wrong keys combination), switch the appliance off and repeat sequence from the beginning.

9.3 Factory Reset

This function allows to restore the factory default options. To **activate** this option follow steps below:

1. Switch the appliance on by pressing On/Off button.
2. Turn the programme knob to the Synthetics programme (3rd position clockwise).
3. Press and hold the Spin and Temperature buttons for some seconds (within 10

seconds after the switching on. After these 10 seconds, the key combination activates and deactivates the acoustic signals).

4. The display will show – – – for about 5 seconds.

ⓘ

If the procedure does not work (due to timeout, wrong programme dial position or wrong keys combination), switch the appliance off and repeat sequence from the beginning.

10. BEFORE FIRST USE

1. Make sure that the electrical power is available and the water tap is open.
2. Pour 2 litres of water into the detergent compartment marked by ⊔II⊔.

This action activates the drain system.

3. Pour a small quantity of detergent into the compartment marked by ⊔II⊔.
4. Set and start a programme for cotton at the highest temperature without any laundry in the drum.

This removes all possible dirt from the drum and the tub.

11. DAILY USE

⚠ **WARNING!**

Refer to Safety chapters.

11.1 Activating the appliance

1. Connect the mains plug to the mains socket.
2. Open the water tap.
3. Press the On/Off button for a few seconds to activate the appliance.

A short tune sounds.

11.2 Loading the laundry

1. Open the appliance door.
2. Empty the pockets and unfold the items before you put them in the appliance.
3. Put the laundry in the drum, one item at a time.

Do not put too much laundry in the drum.

4. Close the door firmly.

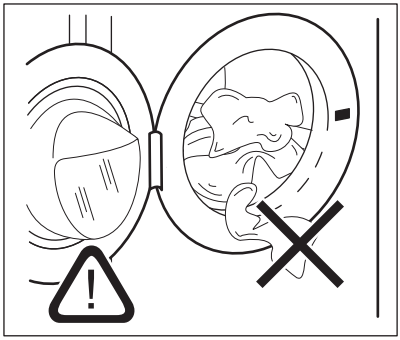

⚠ **CAUTION!**

-Make sure that no laundry gets caught between the seal and the door to avoid risk of water leakage and damage to the laundry.

-Washing heavily oiled, greasy stains or using fragrances perfume could cause damage to rubber parts of the washing machine.

11.3 Filling the detergent and additives

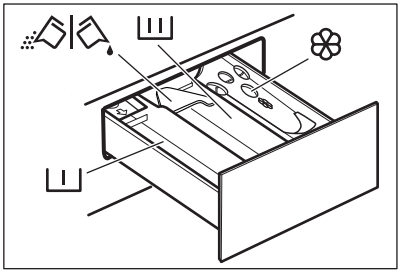

- Compartment for prewash phase, soak programme or stain remover.

- Compartment for washing phase.

- Compartment for fabric softener and other liquid treatments(fabric conditioner, starch).

MAX - Maximum level for quantity of liquid additives.

- Flap for powder or liquid detergent.

Always follow the instructions that you find on the packaging of the detergent products, but we recommend that you do not exceed the maximum indicated level (**MAX**). This quantity will however guarantee the best washing results.

After a washing cycle, if necessary, remove any detergent residue from the detergent dispenser.

11.4 Check the position of the detergent flap

1. Pull out the detergent dispenser until it stops.

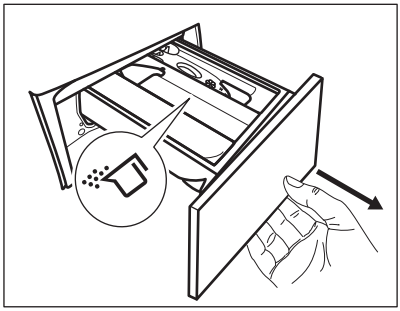

2. Press the lever down to remove the dispenser.
3. To use powder detergent, turn the flap up.
4. To use liquid detergent, turn the flap down.

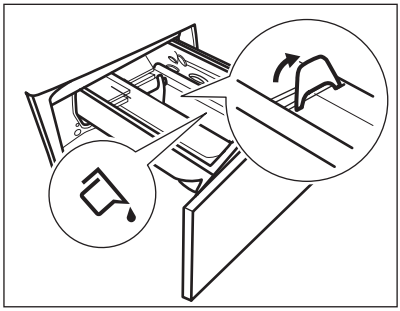

With the flap in the position **DOWN**:
- Do not use gelatinous or thick liquid detergents.
- Do not exceed to liquid detergent dose indicated on the flap.
- Do not set the prewash phase.
- Do not set the delay start function.

5. Measure out the detergent and the fabric conditioner.
6. Carefully close the detergent dispenser.

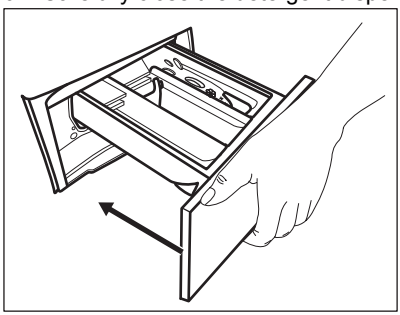

Make sure that the flap does not cause a blockage when you close the drawer.

11.5 Setting a programme

1. Turn the programme dial to select the desired washing programme. The Eco 40-60 is the programme to which the information of the energy label relates.

The indicator of the Start/Pause button flashes.
The display shows an indicative programme duration.

2. To change the temperature and/or the spin speed, touch the related buttons.
3. If desired, set one or more options by touching the related buttons. The related indicators will light up and the given information will change on the display accordingly.

> ⓘ
> If a selection is **not possible** an acoustic signal sounds and the display shows
> – – –.

11.6 Starting a programme

Touch the Start/Pause button to start the programme. It is not possible to start the programme when the indicator of the button is off and doesn't flash (e.g. programme dial on a wrong position).
The related indicator stops flashing and stays on.
The programme starts, the door is locked.
The display shows the indicator and the symbol appears to indicate that it is still possible to stop the cycle and add garments.

> ⓘ
> The drain pump can operate shortly before the appliance fills water.

11.7 Starting a programme with the delay start

1. Touch the Delay Start button repeatedly until the display shows the desired delay time. On the display the indicator shows
2. Touch the Start/Pause button. The appliance door locks and starts the countdown of the delay start. The display shows the indicator .

When the countdown is completed, the programme starts automatically.

Cancelling the delay start after the countdown has started

To cancel the delay start:

1. Touch the Start/Pause button to pause the appliance. The related indicator flashes.
2. Touch the Delay Start button repeatedly until the display shows and the indicator goes off.
3. Touch the Start/Pause button again to start the programme immediately.

Changing the delay start after the countdown has started

To change the delay start:

1. Touch the Start/Pause button to pause the appliance. The related indicator flashes.
2. Touch the Delay Start button repeatedly until the display shows the desired delay time.
3. Touch the Start/Pause button again to start the new countdown.

11.8 The SensiCare System load detection

> ⓘ
> The programme duration in the display is referred to a **medium/high load**.

After touching the Start/Pause button, the SensiCare System starts the laundry load detection:

1. The appliance detects the load in the first 30 seconds. In the programmes where Time Manager is available, during this phase dot separating hours from minutes is blinking and the drum rotates shortly.

2. The programme duration could be adjusted accordingly and could increase or decrease. After further 30 seconds, the water filling starts.

ⓘ

About 20 minutes after the programme start, the programme duration could be adjusted again depending on the capacity of water absorption of the fabrics.

ⓘ

The SensiCare detection is carried out with complete washing programmes only and if the programme duration has not been reduced.

ⓘ

The SensiCare System is not available with all programmes such as :Wool/Silk, Rinse, Spin and programmes with short cycles.

11.9 Interrupting a programme and changing the options

When the programme is running, you can change **only some** options:

1. Touch the Start/Pause button.

The related indicator flashes.

2. Change the options. The given information in the display changes accordingly.
3. Touch the Start/Pause button again.

The washing programme continues.

11.10 Cancelling a running programme

1. Press the button On/Off to cancel the programme and to deactivate the appliance.
2. Press the button On/Off again to activate the appliance.

ⓘ

If the SensiCare System has completed and the water filling has already started, the new programme starts **without repeating the SensiCare System**. The water and the detergent are not drained out in order to avoid waste. The display shows the maximum duration of the programme, updating it about 20 minutes after the starting of the new programme.

There is also an alternative way of cancelling:
1. Rotate the selector knob to the "Reset" position •.
2. Wait for 1 second. The display shows ––– .

Now, you can set a new washing programme.

11.11 Opening the door - Adding garments

If the icon is on, you can always open the door.

ⓘ

If the temperature and level of the water in the drum are too high and/or the drum is still rotating you should not open the door.

While a programme or the delay start operates, the appliance door is locked. The display shows the indicator .

1. Touch the Start/Pause button.

In the display the related door lock indicator goes off.

2. Open the appliance door. If necessary, add or remove the items. Close the door and touch the Start/Pause button.

The programme or the delay start continues.

11.12 End of the programme

When the programme has finished, the appliance stops automatically. The acoustic signals operate (if they are active). The display shows 0:00

The indicator of the Start/Pause button goes off.

The door unlocks and the indicator goes off.

1. Press button On/Off to deactivate the appliance.

After five minutes from the end of the programme, the energy saving function automatically deactivates the appliance.

> ⓘ
> When you activate the appliance again, the display shows the end of the previous programme. Turn the programme dial to set a new cycle.

2. Remove the laundry from the appliance.
3. Make sure that the drum is empty.
4. Keep the door and the detergent dispenser slightly ajar to prevent mildew and odours.

11.13 Draining water out after end of cycle

If you have chosen a programme or an option that does not empty out the water of the last rinse, the programme is completed, but:

- The time area shows 0:00 and the display shows the door locked.
- The indicator of the Start/Pause button starts flashing.
- The drum still turns at regular intervals to prevent creases in the laundry.
- The door stays locked.
- You must drain the water to open the door:

1. If necessary, touch the Spin button to decrease the spin speed proposed by the appliance.
2. Press the Start/Pause button: the appliance drains the water and spins.

The option indicator Rinse Hold or disappears.

> ⓘ
> If you have set Quiet and the spin speed is not changed, when you press the Start/Pause button, the appliance only drains the water.

3. When the programme is completed and the door locked indicator goes off, you can open the door.
4. Press the On/Off button for a few seconds to deactivate the appliance.

11.14 Stand-by function

The Stand-by function automatically deactivates the appliance to reduce the energy consumption when:

- You do not use the appliance for 5 minutes when no programme is running. Press the button On/Off to activate the appliance again.
- 5 minutes after the end of the washing programme.
  Press the On/Off button to activate the appliance again.
  The display shows the end of the last programme.
  Turn the programme dial to set a new cycle.

If the dial is rotated to the "Reset" position •, the appliance automatically turns off in 30 seconds.

> ⓘ
> If you set a programme or an option that ends with water in the drum, the Stand-by function **doesn't deactivate** the appliance to remind you to drain the water.

12. HINTS AND TIPS

> ⚠ **WARNING!**
> Refer to Safety chapters.

12.1 The laundry load

- Divide the laundry into: white, coloured, synthetics, delicates and wool.

- Follow the washing instructions on the laundry care labels.
- Do not wash white and coloured items together.
- Remember that the temperature on the care label is referring to max temperature and is not recommended temperature.
- Check the level of need for wash, the garments may only need a refresh and Steam Refresh can be used instead
- Some coloured items can discolour with the first wash. We recommend that you wash them separately for the first couple of times.
- Turn multilayered fabrics, wool and items with printed illustrations inside out.
- Pre-treat stubborn stains.
- Wash stubborn stains with a special detergent.
- Be careful with curtains. Remove the hooks and put the curtains in a washing bag or pillowcase.
- A very small load can cause balance problems with the spin phase leading to excessive vibration. If this occurs:
  a. interrupt the programme and open the door (refer to "Daily Use" chapter);
  b. manually redistribute the load so that the items are spaced evenly around the tub;
  c. press the Start/Pause button. The spin phase continues.
- Button up pillowcases, close zippers, hooks and poppers. Tie up belts, cords, shoelaces, ribbons and any other loose elements.
- Do not wash laundry without hems or with cuts. Use a washing bag to wash small and/or delicate items (e.g. underwired bras, belts, tights, shoelaces, ribbons, etc.).

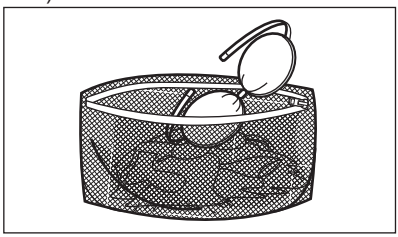

- Empty pockets and unfold the items.

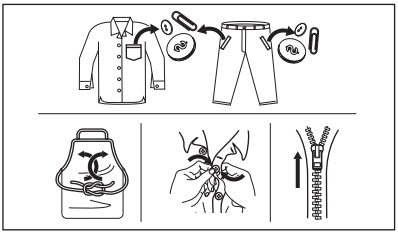

12.2 Stubborn stains

For some stains, water and detergent is not sufficient.

We recommend that you pre-treat these stains before you put the items in the appliance.

Special stain removers are available. Use the special stain remover that is applicable to the type of stain and fabric.

Do not spray stain remover on garments near the appliance as it is corrosive to the plastic parts.

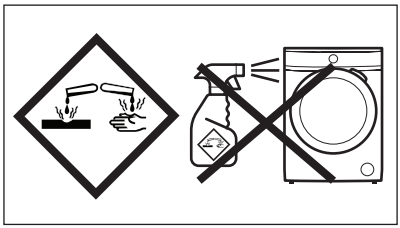

12.3 Detergent type and quantity

The choice of detergent and use of correct quantities not only affects your wash performance, but also helps to avoid waste and protect the environment:

- Use only detergents and other treatments specially made for washing machines. First, follow these generic rules:
  – powder detergents (also tablets and single-dose detergents) for all types of fabric, excluding delicate. Prefer powder detergents containing bleach for whites and laundry sanitization,
  – liquid detergents (also single-dose detergents) , preferably for low temperature wash programmes (60 °C max) for all types of fabric, or special ones for woollens only.

- The choice and quantity of detergent will depend on: type of fabric (delicates, woollens, cottons, etc), the colour of clothes, size of the load, degree of soiling, wash temperature, time and hardness of the water used.
- Follow the instructions that you find on packaging of the detergents or other treatments without exceeding the indicated maximum level (**MAX**).
- Do not mix different types of detergents.
- Use less detergent if:
  - you are washing a small load,
  - the programme duration has been reduced by the Time Manager button.
  - the laundry is lightly soiled,
  - there is large amounts of foam during washing.
- When using detergent tabs or pods, always put them inside the drum, not in the detergent dispenser and follow the manufacturer's recommendations .

Insufficient detergent may cause:
- unsatisfactory washing results,
- the wash load to turn grey,
- greasy clothes,
- mould in the appliance.

Excessive detergent may cause:
- sudsing,
- reduced washing effect,
- inadequate rinsing,
- a greater impact for the environment.

12.4 Savings tips

To save water, energy and detergent we recommend that you follow these tips:

- **Normally soiled laundry** may be washed **without prewash** in order to save detergent, water and time.
- Loading the appliance to the **maximum capacity indicated for each programmes helps to reduce energy and water consumption**.
- With adequate pre-treatment, stains and limited soiling can be removed; the laundry can then be washed at a lower temperature.
- To use the correct quantity of detergent, refer to the quantity suggested by the detergent producer and check the water hardness of your domestic system. Refer to 'Water hardness'.
- If you have a tumble dryer its suggested to use **maximum possible spin speed** for the selected washing programme in order to save energy during drying.
- Preferably, use short cycles at lower temperatures.

12.5 Water hardness

If the water in your area is hard or medium hard, we recommend that you use a water softener additive for washing machines.

In areas where the water is soft it is not necessary to use a water softener.

To find out the water hardness in your area, contact your local water authority.

Use the correct quantity of water softener. Follow the instructions that you find on the packaging of the product.

13. TROUBLESHOOTING

⚠ **WARNING!**

Refer to Safety chapters.

13.1 Alarm Codes and Possible failures

The appliance does not start or it stops during operation. First try to find a solution to the problem (refer to the tables).

⚠ **WARNING!**

Deactivate the appliance before carrying out any check.

With some problems, the display shows an alarm code and the Start/Pause ▷II **button may flash continuously:**

ⓘ

If the appliance is overloaded, remove some items from the drum and/or keep pressed the door while touching the Start/Pause button until the indicator stops flashing (see the picture below).

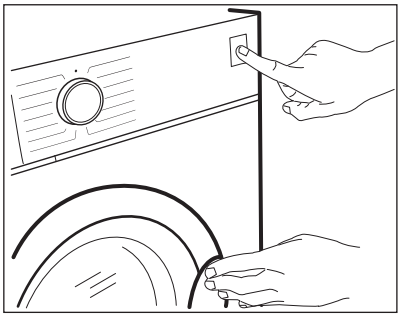

Problem	Possible solution
E 10 The appliance does not fill with water properly.	• Make sure that the water tap is open. • Make sure that the pressure of the water supply is not too low. For this information, contact your local water authority. • Make sure that the water tap is not clogged. • Make sure that the inlet hose has no kinks, damages or bends. • Make sure that the connection of the water inlet hose is correct. • Make sure that the filter of the inlet hose and the filter of the valve are not clogged. Refer to 'Care and cleaning'.
E20 The appliance does not drain the water.	• Make sure that the sink spigot is not clogged. • Make sure that the drain hose has no kinks or bends. • Make sure that the drain filter is not clogged. Clean the filter, if necessary. Refer to "Care and cleaning". • Make sure that the connection of the drain hose is correct. • Set the drain programme if you set a programme without drain phase. • Set the drain programme if you set an option which ends with water in the tub.
E40 The appliance door is open or not closed correctly.	• Make sure that the door is properly closed.
E91 Internal fail. No communication between electronic elements of the appliance.	• The programme was not finished properly or the appliance stopped too early. Switch the appliance off and on again. • If the alarm code appears again, contact the Authorised Service Centre.
EH0 The mains supply is unstable.	• Wait until mains supply is stable.

EFO The anti-flood device is on.	• Disconnect the appliance and close the water tap. Contact the Authorised Service Centre.

If the display shows other alarm codes, deactivate and activate the appliance. If the problem continues, contact the Authorised Service Centre.
In case of different problem with the appliance check the table below for possible solutions.

Problem	Possible solution
The programme does not start.	• Make sure that the mains plug is connected to the mains socket. • Make sure that the appliance door is closed. • Make sure that there is no damaged fuse in the fuse box. • Make sure that the Start/Pause ▷II has been touched. • If the delay start is set, cancel the setting or wait for the end of countdown. • Deactivate the Child Lock function if it is on. • Check the position of the knob on the selected programme.
The appliance fills with water and drains immediately.	• Make sure that the drain hose is in the correct position. The hose may be positioned too low. Refer to "Installation instruction".
The spin phase does not operate or the washing cycle lasts longer than usual.	• Set the spin programme. • Make sure that the drain filter is not clogged. Clean the filter, if necessary. Refer to "Care and cleaning". • Adjust manually the items in the tub and start the spin phase again. This problem may be caused by balance problems.
There is water on the floor.	• Make sure that the couplings of the water hoses are tight and there is not water leakages. • Make sure that the water inlet hose and the drain hose have no damages. • Make sure you use the correct detergent and the correct quantity of it.
You cannot open the appliance door.	• Make sure that a washing programme that ends with water in tub, has not been selected. • Make sure that the washing programme is finished. • Set the drain or the spin programme if there is water in the drum. • Make sure that the appliance receives electrical power. • This problem may be caused by a failure of the appliance. Contact the Authorised Service Centre. If you need to open the door, please read carefully "Emergency door opening".
The appliance makes an unusual noise and vibrates.	• Make sure the levelling of the appliance is correct. Refer to "Installation instruction". • Make sure that the packaging and/or the transit bolts are removed. Refer to "Installation instruction". • Add more laundry in the drum. The load may be too small.
The programme duration increases or decreases during programme execution.	• The SensiCare System is able to adjust the programme duration according to the type and the laundry load size. Refer to "The SensiCare System load detection" in "Daily Use" chapter.

Problem	Possible solution
The washing results are not satisfactory.	• Increase the detergent quantity or use a different detergent. • Use special products to remove the stubborn stains before you wash the laundry. • Make sure that you set the correct temperature. • Decrease the laundry load.
Too much foam in the drum during the washing cycle.	• Reduce the quantity of detergent or the number of tablets or single-dose detergents.
After the washing cycle, there are some detergent residues in the dispenser drawer.	• Make sure that the flap is in the correct position (UP for powder detergent - DOWN for liquid detergent). • Make sure you have used the detergent dispenser according the indications given in this user manual.

After the check, activate the appliance. The programme continues from the point of interruption.
If the problem occurs again, contact the Authorised Service Centre.
The necessary data for the service centre are on the rating plate.

13.2 Emergency door opening

In case of power failure or functioning failure the appliance door remains locked. The washing programme continues when the power is restored. If the door remains locked in case of failure, it is possible to open it using the emergency unlock function.

Before opening the door:

⚠ **CAUTION!**

Risk of burns! Make sure that the water temperature is not too high and the laundry is not hot. If necessary, wait until they cool down.

⚠ **CAUTION!**

Risk of injury! Make sure that the drum is not rotating. If necessary, wait until the drum stops rotating.

ⓘ

Make sure that the water level inside the drum is not too high. If necessary, proceed with an emergency drain (refer to «Emergency drain» in «Care and cleaning» chapter).

To open the door, proceed as follows:

1. Press the On/Off button to switch the appliance off.
2. Disconnect the mains plug from the mains socket.
3. Pull the emergency unlock trigger downward once. Pull it once again, keep it tensed and, in the meanwhile, open the appliance door. The emergency unlock trigger is located where indicated by the following picture.

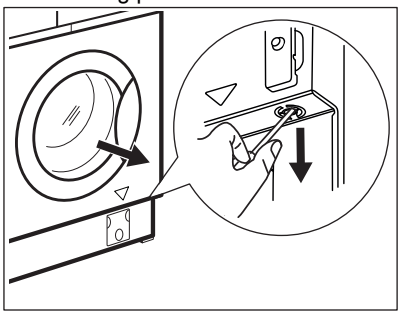

4. Take out the laundry and then close the appliance door.

14. CARE AND CLEANING

⚠ **WARNING!**

Refer to Safety chapters.

14.1 Periodic cleaning schedule

Periodic cleaning helps to extend the life of your appliance.

After each cycle, keep the door and the detergent dispenser slightly open to get air circulation and dry the humidity inside the appliance.

If the appliance is not used for a long time: close the water tap and unplug the appliance.

Indicative periodic cleaning schedule:

Descaling	Twice a year
Maintenance wash	Once a month
Clean door seal	Every two months
Clean drum	Every two months
Clean detergent dispenser	Every two months
Clean drain pump filter	Twice a year
Clean the inlet hose and the valve filter	Twice a year

14.2 Removing foreign objects

ⓘ

Make sure that pockets are empty and all loose elements are tied up before running your cycle.

Remove any foreign objects (such as metal clip, buttons, coins, etc) that you may find in the door seal, the filters and the drum. Refer to "Door seal with double lip trap", "Cleaning the drum", "Cleaning the drain pump" and "Cleaning the inlet hose and the valve filter" paragraphs. Be careful with curtains. Remove the hooks and put the curtains in a washing bag or pillowcase. If necessary, please contact the Authorised Service Centre.

14.3 External cleaning

Clean the appliance with mild soap and warm water only. Fully dry all the surfaces. Do not use a scouring pads or any scratching material.

⚠ **CAUTION!**

Do not use alcohol, solvents or chemical products.

⚠ **CAUTION!**

Do not clean the metal surfaces with chlorine-based detergent.

14.4 Descaling

ⓘ

If the water in your area is hard or medium hard, we recommend that you use a water softener for washing machines.

Regularly examine the drum to check for limescale.

Regular detergents already contain water softening agents, but we recommend to run a cycle with an empty drum and a descaling product.

ⓘ

Always follow the instructions that you find on the packaging of the product.

14.5 Maintenance wash

The repeated and prolonged use of low temperature programmes can cause detergent deposits, fluff residues, bacterial growth inside the drum and the tub. This could generate bad odours and mildew. To eliminate these deposits and clean the inner part of the appliance, run a maintenance wash regularly (at least once a month).

ⓘ

Refer to "Cleaning the drum" paragraph.

14.6 Door seal with double lip trap

This appliance is designed with a **self cleaning draining system**, allowing light fluff fibers that fall off the clothes to be drained out with the water. Regularly examine the seal and if necessary clean as described in the following diagram. Coins, buttons, other small items can be recovered at the end of the cycle.

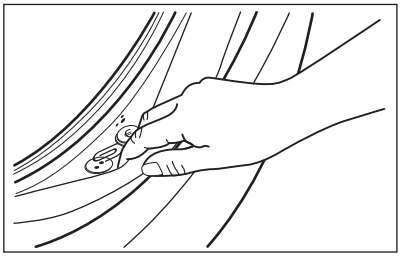

Clean it when needed, using ammonia cream cleanser agent without scratching the seal surface.

> ⓘ
> Always obey the instructions that you find on the packaging of the product.

Check and remove objects (if there are any) that could be trapped in the fold.

Make sure that no laundry remains between the seal and the door.

Use a moist cloth to wipe off any dirt or water residue left behind in the door seal after completion of program cycle.

14.7 Cleaning the drum

Regularly examine the drum to prevent unwanted deposits.

Rust deposits in the drum may occur due to rusting foreign body in the washing or tap water containing iron

Clean the drum with special products for stainless steel.

> ⓘ
> Always follow the instructions that you find on the packaging of the product.
> Do not clean the drum with acidic descaling products, scouring products containing chlorine or iron or steel wool.

For a thorough clean:

1. Remove all laundry from the drum.
2. Run a Cottons programme with the highest temperature.
3. Add a small quantity of powder detergent into the empty drum, in order to rinse out any left residues.

> ⓘ
> Occasionally, at the end of a cycle the display may show the icon ⠿: this is a recommendation to perform the “drum cleaning”. Once the drum cleaning has been performed, the icon disappears.

14.8 Cleaning the detergent dispenser

To prevent possible deposits of dried detergent or clotted fabric softener and/or formation of mould in the detergent dispenser drawer, every two months carry out the following cleaning procedure how explained in the following diagrams:

1. Open the drawer. Press the catch downwards as indicated in the picture and pull it out.

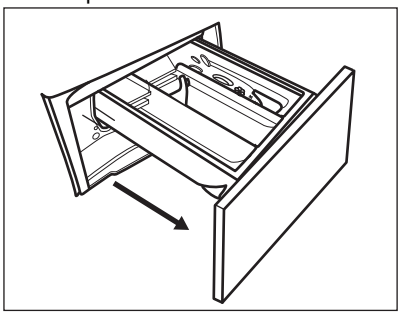

2. Remove the top part of the additive compartment to aid cleaning and flush it out under running warm water, to remove any traces of accumulated detergent.

After cleaning, put the top part back into position.

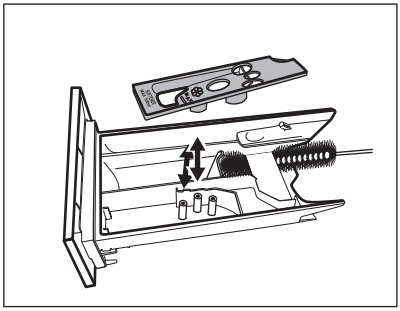

3. Make sure that all detergent residue is removed from the upper and lower part of the recess. Use a small brush to clean the recess.

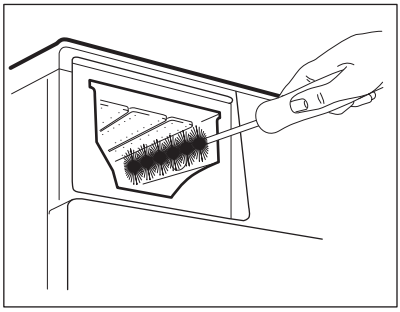

4. Insert the detergent drawer into the guide rails and close it. Run the rinsing programme without any clothes in the drum.

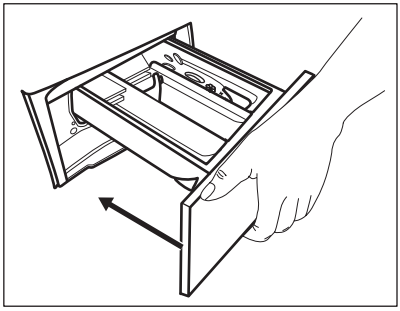

Proceed as described in following diagrams to clean the pump filter:

14.9 Cleaning the drain pump filter

⚠ **WARNING!**

Disconnect the mains plug from the mains socket.

ⓘ

Regularly check the drain pump filter and make sure that it is clean.

Clean the drain pump if:

- The appliance does not drain the water.
- The drum does not turn.
- The appliance makes an unusual noise because of the blockage of the drain pump.
- The display shows the alarm code E20.

⚠ **WARNING!**

- Do not remove the filter while the appliance operates.
- Do not clean the pump if the water in the appliance is hot. Wait until the water cools down

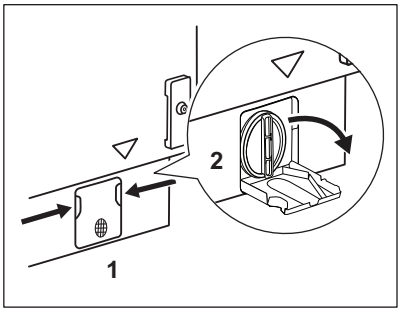

1. Open the pump cover.

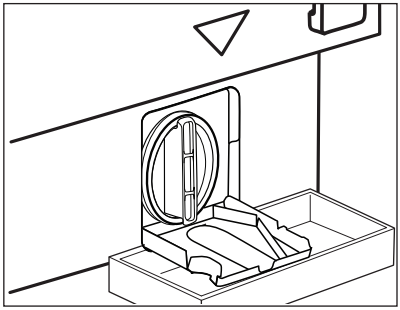

2. Place a suitable bowl below the drain pump access to collect the water that flows out.
Always keep a rag nearby to dry up any water spillages when removing the filter.

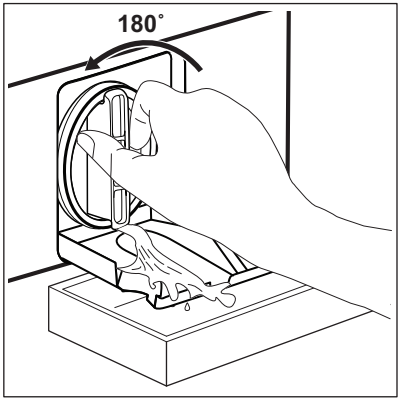

3. Turn the filter 180 degrees in anti-clockwise direction to open it, without removing. Let the water flow out.
4. When the bowl is full of water, turn the filter back and empty the container.
5. Repeat the steps 3 and 4 until the water stops to flow out.

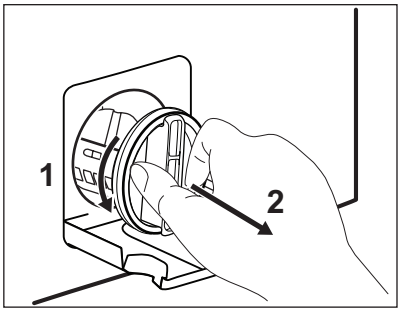

6. Turn the filter anti-clockwise to remove it

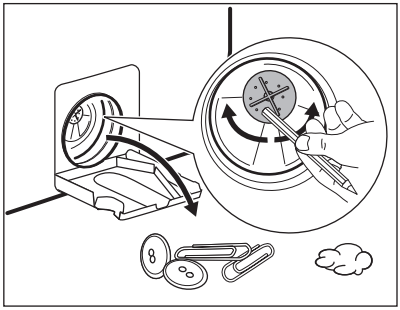

7. If it is necessary, remove fluff and objects from the filter recess.
Make sure that the impeller of the pump can rotate. If it does not rotate, contact the Authorised Service Centre.

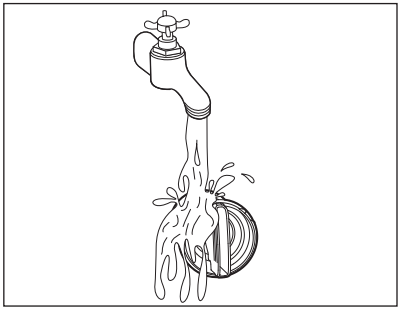

8. Clean the filter under the water tap.

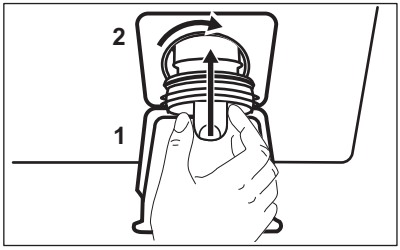

9. Put the filter back into the special guides by turning it clockwise. Make sure that you tighten the filter correctly to prevent leakages.

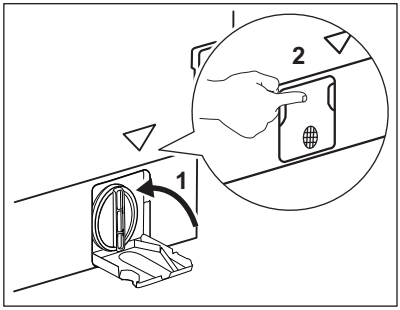

10. Close the pump cover.

When you drain the water with the emergency drain procedure, you must activate the drain system again:

1. Put 2 litres of water in the main wash compartment of the detergent dispenser.
2. Start the programme to drain the water.

14.10 Cleaning the inlet hose and the valve filter

It is recommended to clean both the filters of the inlet hose and valve twice a year to remove any deposit, collected over the time. Proceed as described in following diagrams to clean filters:

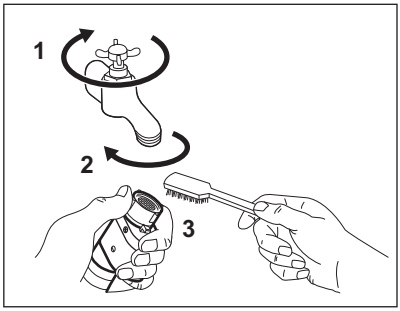

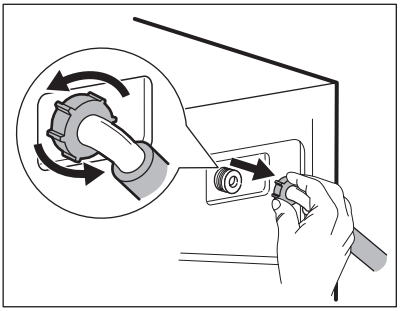

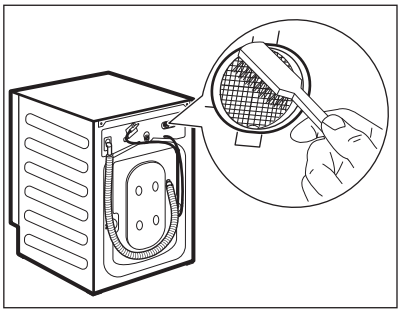

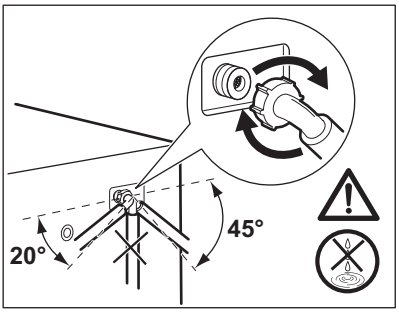

14.11 Emergency drain

If the appliance cannot drain the water, carry out the same procedure, described in 'Cleaning the drain pump' paragraph. If necessary, clean the pump.

When you drain the water with the emergency drain procedure, you must activate the drain system again:

1. Put 2 litres of water in the main wash compartment of the detergent dispenser.
2. Start the programme to drain the water.

14.12 Frost precautions

If the appliance is installed in an area where the temperature can reach values around 0° C or drop below, remove the remaining water from the inlet hose and the drain pump.

1. Disconnect the mains plug from the mains socket.
2. Close the water tap.
3. Put the two ends of the inlet hose in a container and let the water flow out of the hose.
4. Empty the drain pump. Refer to the emergency drain procedure.
5. When the drain pump is empty, install the inlet hose again.

⚠ **WARNING!**

Make sure that the temperature is higher than 0 °C before you use the appliance again.
The manufacturer is not responsible for damages caused by low temperatures.

15. CONSUMPTION VALUES

15.1 Comment

ⓘ

The QR code on the energy label supplied with the appliance provides a web link to the information related to the performance of the appliance in the EU EPREL database. Keep the energy label for reference together with the user manual and all other documents provided with this appliance.
It is also possible to find the same information in EPREL using the link **https://eprel.ec.europa.eu** and the model name and product number that you find on the rating plate of the appliance.

ⓘ

Values and programme duration may differ depending on different conditions (e.g. room temperature, water temperature and pressure, load size and type of laundry, supply voltage) and also if you change the default setting of a programme.

15.2 According to Commission Regulation Eu 2019/2023

Eco 40-60 programme	kg	kWh	Litres	hh:mm	% 1)	°C	rpm 2)
Full load	8.0	0.720	55.0	03:30	53.00	36.0	1351
Half load	4.0	0.435	45.0	02:37	53.00	32.0	1351

Eco 40-60 programme	kg	kWh	Litres	hh:mm	% 1)	°C	rpm2)
Quarter load	2.0	0.230	35.0	02:25	54.00	26.0	1351

1) Remaining moisture at the end of the spinning phase. The higher is the spin speed, the higher is the noise and the lower is the remaining moisture.

2) Maximum spin speed.

Power consumption in different modes

Off (W)	Stand-by (W)	Delay start (W)
0.50	0.50	4.00
Time to Off/Standby mode is 15 minutes maximum.		

15.3 Common programmes

ⓘ

These values are indicative only.

Programme	kg	kWh	Litres	hh:mm	% 1)	°C	rpm2)
Cottons3) 90°C	8.0	2.250	85.0	04:00	52.00	85.0	1400
Cottons 60°C	8.0	1.350	80.0	03:25	52.00	55.0	1400
Cottons4) 20°C	8.0	0.250	80.0	02:50	52.00	20.0	1400
Synthetics 40°C	3.0	0.650	75.0	02:25	35.00	40.0	1200
Delicates5) 30°C	2.0	0.360	50.0	01:10	35.00	30.0	1200
Wool 30°C	1.5	0.200	55.0	01:05	30.00	30.0	1200

1) Remaining moisture at the end of the spinning phase. The higher is the spin speed, the higher is the noise and the lower is the remaining moisture.

2) Reference indicator of the spin speed.

3) Suitable for washing heavily soiled textiles.

4) Suitable for washing lightly soiled cottons, synthetic and mixed fabrics.

5) It also performs as quick washing cycle for lightly soiled laundry.

16. QUICK GUIDE

16.1 Daily use

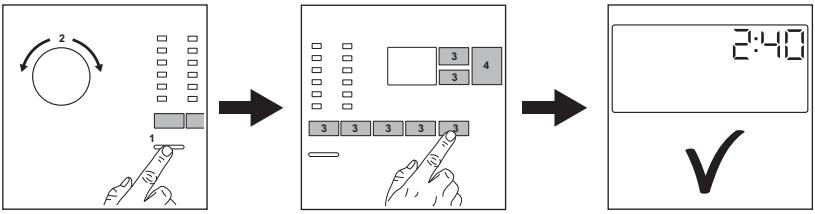

- Connect the mains plug to the mains socket.
- Open the water tap.
- Push the **On/Off** button to turn the appliance on **(1)**.
- Turn the programme dial to set the desired programme **(2)**.
- Set the desired options by means of the corresponding touch buttons **(3)**.
- Put the laundry in the drum, one item a time without exceeding the maximum suggested load. Close the door and make sure that no laundry stays between the seal and the door.
- Pour the detergent and other treatment in the proper compartment of the detergent dispenser.
- To start the programme, touch the **Start/ Pause** ▷‖ button **(4)**.
- The appliance starts.
- At the and of the programme, remove the laundry.
- Push the **On/Off** button to turn the appliance off.

16.2 Cleaning the drain pump filter

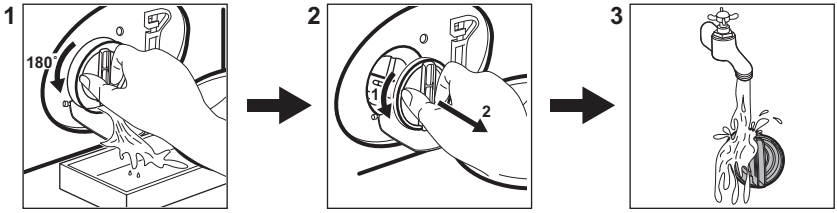

Clean the filter regularly and, especially, if the alarm code E20 appears on the display.

16.3 Programme Chart

Programmes	Load	Product description
Eco 40-60 **1)**	8.0 kg	White and coloured cottons. Normally soiled garments.

Programmes	Load	Product description
Cottons	8.0 kg	White cotton and coloured cotton.
Synthetics	3.0 kg	Synthetic items or mixed fabric items.
Delicates	2.0 kg	Delicate fabrics such as acrylics, viscose, polyester items.
Hygiene	8.0 kg	White cotton items. This programme with steam vapour phase helps to remove germs and bacteria.
FreshScent	1.0 kg	All fabrics, except woollens and very delicate fabrics. Programme for rinsing and spinning.
Spin/Drain	8.0 kg	All fabrics, except woollens and very delicate fabrics. Programme for spinning and draining the water.
Rinse	8.0 kg	All fabrics, except woollens and very delicate fabrics. Programme for rinsing and spinning.
Duvet	3.0 kg	**Single synthetic blanket, padded clothes, duvets, down jackets** and similar items.
Rapid 14min	1.5 kg	**Synthetic and mixed fabric** items. Lightly soiled items and items to freshen up.
Sport	3.0 kg	**Synthetic sportswear**. Intensive short cycle to deeply wash sportswear.
Outdoor	2.0 kg	Modern outdoor sporting garments.
Denim	3.0 kg	**Special programme for Denim clothing with delicate washing phase to minimize colour fading and marks**. For better care a reduced load size is recommended.
Wool/Silk	1.5 kg	Machine washable wool, hand washable wool and delicates.

1) According to Commission Regulation EU 2019/2023, this programme at 40 °C is able to clean normally soiled cotton laundry declared to be washable at 40 °C or 60 °C, together in the same cycle.

ⓘ

For the reached temperature in the laundry, the programme duration and other data, please refer to 'Consumption Values' chapter.
The most efficient programmes in terms of energy consumption are generally those that perform at lower temperatures and longer duration.

Loading the appliance **to the maximum capacity indicated** for each programmes helps to reduce energy and water consumption.

Suitable detergents for each programme

Programme	Universal powder[1)]	Liquid Universal	Liquid for coloureds	Delicates woollens	Special
Eco 40-60	▲	▲	▲	--	--
Cottons	▲	▲	▲	--	--
Synthetics	▲	▲	▲	--	--
Delicates	--	--	--	▲	▲

Programme	Universal powder[1)]	Liquid Universal	Liquid for coloureds	Delicates woollens	Special
Hygiene	▲	▲	--	--	▲
Duvet	--	--	--	▲	▲
Rapid 14min	--	▲	▲	--	--
Sport	--	▲	▲	--	▲
Outdoor	--	--	--	▲	▲
Denim	--	--	▲	▲	▲
Wool/Silk	--	--	--	▲	▲

1) At temperature higher than 60 °C the use of powder detergent is recommended.

▲ = Recommended

-- = Not recommended

16.4 Detergent type and quantity.

- Use only detergents and other treatments specially made for washing machines. First, follow these generic rules:
  - powder detergents (also tablets and single-dose detergents) for all types of fabric, excluding delicate. Prefer powder detergents containing bleach for whites and laundry sanitization,
  - liquid detergents (also single-dose detergents), preferably for low temperature wash programmes (60 °C max) for all types of fabric, or special ones for woollens only.
- Do not mix different types of detergents.
- Use less detergent if:
  - you are washing a small load,
  - the laundry is lightly soiled,
  - there is large amounts of foam during washing.
- When using detergent tabs or pods, always put them inside the drum, not in the detergent dispenser and follow the manufacturer's recommendations.

Insufficient detergent may cause:
- unsatisfactory washing results,
- the wash load to turn grey,
- greasy clothes,
- mould in the appliance.

Excessive detergent may cause:
- sudsing,
- reduced washing effect,
- inadequate rinsing,
- a greater impact for the environment.

16.5 Periodic cleaning schedule

Periodic cleaning helps to extend the life of your appliance.

After each cycle, keep the door and the detergent dispenser slightly open to get air circulation and dry the humidity inside the appliance.

If the appliance is not used for a long time: close the water tap and unplug the appliance.

Indicative periodic cleaning schedule:

Descaling	Twice a year
Maintenance wash	Once a month
Clean door seal	Every two months
Clean drum	Every two months
Clean detergent dispenser	Every two months
Clean drain pump filter	Twice a year
Clean the inlet hose and the valve filter	Twice a year

Regularly examine the drum to check for limescale. We recommend to run a cycle with

empty drum and a descaling product occasionally.

Removing foreign objects

ⓘ

Make sure that pockets are empty and all loose elements are tied up before running your cycle.

Remove any foreign objects (such as metal clip, buttons, coins, etc) that you may find in the door seal, the filters and the drum. If necessary, please contact the Authorised Service Centre.

Door seal

This appliance is designed with a **self cleaning draining system**, allowing light fluff fibers that fall off the clothes to be drained out with the water. Regularly examine the seal and if necessary clean as described in the following diagram. Coins, buttons, other small items can be recovered at the end of the cycle.

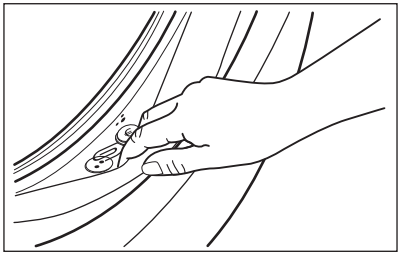

Clean it when needed, using ammonia cream cleanser agent without scratching the seal surface.

If it is necessary, remove fluff and objects from the filter recess.

17. ENVIRONMENTAL CONCERNS

Recycle materials with the symbol ♲. Put the packaging in relevant containers to recycle it. Help protect the environment and human health by recycling waste of electrical and electronic appliances. Do not dispose of appliances marked with the symbol with the household waste. Return the product to your local recycling facility or contact your municipal office.

electrolux.com

128038080-A-252026