# Induction Range, 36", 5 Zones with SmartZone, Self-cleaning

Series 9 | Professional

Stainless Steel




With intuitive touchscreen, induction cooktop and a convection oven with 15 functions, cooking on this refined range is a joy.

- Guided cooking using your touchscreen makes it simple to cook by food, function or recipe.
- Five induction cooking zones, which can be paired to form two large SmartZones
- 4.8 cu ft total oven capacity
- Beautiful LED halo-illuminated dials provide information at a glance

## DIMENSIONS

| | |
|---|---|
| **Height** | **35 3/4 - 36 3/4 "** |
| **Width** | **35 7/8 "** |
| **Depth** | **29 1/8 "** |

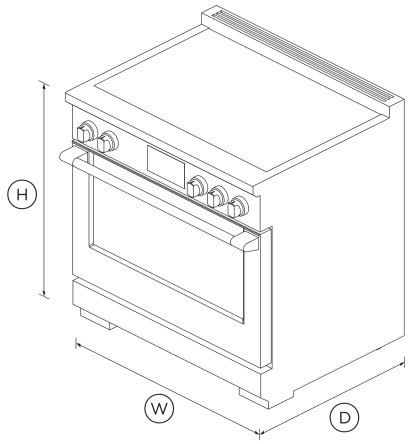


## FEATURES & BENEFITS

**Cook With Confidence**

Our touchscreen interface provides an intuitive guided cooking experience that helps deliver perfect results, whether you've been cooking all your life or just starting out. Cook with a favorite method, a hero ingredient, or a go-to cooking function or recipe. The screen tilts for improved ergonomics and optimal visibility while cooking.

**Generous Capacity**

Featuring a large 4.8 cu ft total capacity convection oven, with enough room to fit a 32 lb turkey and full-size baking sheets.

**Cooking Flexibility**

No matter what you're cooking, you've got the right heat to get perfect results. Each of the 15 oven functions have been extensively researched and carefully designed to cater to a broad range of dishes and cooking styles. The handy food probe helps you monitor your progress.

**Cooktop Power**

Instant and immediate control from the highest to the gentlest heat. The finely tuned cooktop controls let you sear, stir fry or simmer to perfection. Since most of the heat generated by the cooktop is transferred into cookware, induction offers an energy-efficient cooking option.

**Design Quality**

This range has craftsmanship in every detail, with real stainless steel, high-quality glass, and beautifully weighted, halo illuminated dials. Each cavity features incandescent lights and full extension telescopic racks. From the robust legs to the powerful cooktop, this Range is built to last.

**Easy To Clean**

The oven features a self-cleaning function and self-clean proof side racks, which don't need to be removed when using this function. The durable induction cooktop surface only needs a quick wipe after use to keep it clean.

## SPECIFICATIONS

**Accessories (included)**

| | |
|---|---|
| Adjustable feet covers | • |
| Branded coin end cap | • |

### Accessories (sold separately)

| | |
|---|---|
| Square handle option | **AH-R36** |
| Wok grate included | **No** |

### Capacity

| | |
|---|---|
| Shelf positions | **5** |
| Total capacity | **4.8 cu ft** |
| Usable capacity | **3.8 cu ft** |

### Cleaning

| | |
|---|---|
| Pyrolytic self-clean | • |

### Controls

| | |
|---|---|
| Dial with illuminated halo | • |
| Electric circuit | **4 wire** |
| High resolution display | • |
| Metal illuminated dials | • |
| Multi-language interface | • |
| Precise cooking with food probe | • |
| Sabbath mode | • |
| Tilting touch screen interface | • |
| Wi-Fi connectivity | • |

### Main oven functions

| | |
|---|---|
| Warm | • |

### Oven features

| | |
|---|---|
| Concealed element | • |
| Electronic oven control | • |
| Food probe | • |
| Internal light | **true** |
| Large broil pan | • |
| Self-clean proof side racks | • |
| True convection | • |

### Oven functions

| | |
|---|---|
| Air fry | • |
| Bake | • |
| Classic bake | • |
| Convection Broil | • |
| Dehydrate | • |
| Maxi Broil | • |
| Number of functions | **14** |
| Pastry bake | • |
| Pizza bake | • |
| Rapid proof | • |
| Roast | • |
| Self-clean function | • |
| Slow cook | • |
| True convection | • |
| Warm | • |

### Oven performance

| | |
|---|---|
| Bake power | **4600** |
| Main oven - True convection power | **2500 W** |

### Power Requirements

| | |
|---|---|
| Connection | **4-prong grounding type [NEMA 14-50P plug]** |
| Service | **50 A** |
| Supply | **120 / 240 V, 60 Hz** |

### Product Dimensions

| | |
|---|---|
| Depth | **29 1/8 "** |
| Depth (excluding handles) | **2918 mm** |
| Height | **35 3/4 - 36 3/4 "** |
| Width | **35 7/8 "** |

### Rangetop features

| | |
|---|---|
| Dual zones | • |
| Gentle heat | • |
| Heat settings | **9** |
| Induction cooking technology | • |
| SmartZone | **1** |
| Zone bridging | • |

### Rangetop Performance

| | |
|---|---|
| Centre | **2600 W** |
| Left front zone rating | **2100 (3700) W** |
| Left rear zone rating | **2100 (3700) W** |
| Number of cooking zones | **5** |
| PowerBoost | • |
| Right front zone rating | **2100 (3700) W** |

| | |
|---|---|
| Right rear zone rating | **2100 (3700) W** |

**Recommended Back Guards Ventilation**

| | |
|---|---|
| Combustible situation | **BGRV3-3036H** |
| Non combustible situation | **BGRV2-3036 / BGRV2-1236** |
| Recommended hood | **HCB36-6_N (36" Professional Range Hood) / HCB36-12_N (36" Professional Range Hood, Dual Blower)** |

**Safety**

| | |
|---|---|
| ADA compliant | • |
| Pan detection system | • |
| Safety time out | • |
| Surface hot indicators | • |

**Secondary oven features**

| | |
|---|---|
| Food probe | • |

**Warranty**

| | |
|---|---|
| Parts and labor | **Limited 2 years** |

| | |
|---|---|
| SKU | 81892 |

The product dimensions and specifications in this page apply to the specific product and model. Under our policy of continuous improvement, these dimensions and specifications may change at any time. You should therefore check with Fisher & Paykel's Customer Care Centre to ensure this page correctly describes the model currently available. © Fisher & Paykel Appliances Ltd 2020

**Other product downloads available at fisherpaykel.com**

- 2D-DWG Induction Range
- 2D-DXF Induction Range
- 2D-DWG Induction Range and Professional Range Backguard
- 2D-DWG Induction Range and Professional Range Backguard
- 2D-DWG Induction Range and Professional Range Backguard with Angled Vent Trim
- 2D-DXF Induction Range and Professional Range Backguard
- 2D-DXF Induction Range and Professional Range Backguard
- 2D-DXF Induction Range and Professional Range Backguard with Angled Vent Trim
- ArchiCAD Induction Range
- Data Sheet Induction Range and Professional Range Backguard
- Data Sheet Induction Range and Professional Range Backguard
- Data Sheet Induction Range and Professional Range Backguard with Angled Vent Trim
- Data Sheet Induction Range
- Service & Warranty
- Installation Guide EN
- Guide d'installation FR
- Planning Guide Professional Style Dial/Handle Accessories
- Planning Guide Induction Range
- Revit Induction Range
- Rhino Induction Range
- SketchUp Induction Range
- Specification Guide Induction Range
- User Guide Professional Range EN

**Where applicable:**

All appliances use energy, and energy usage typically generates carbon emissions. **Fisher & Paykel Appliances' In-use Energy Carbon Emissions Estimate** indicates carbon emissions from a product's in-use energy. This is calculated either annually or per cycle, using the product's market-specific energy label energy consumption data multiplied by the carbon emissions factor for energy in your country or region.

Our In-use Energy Carbon Emissions Estimate is designed to assist customers in making informed purchasing decisions when comparing different Fisher & Paykel products. For example, a heat pump dryer typically has a lower In-use Energy Carbon Emissions Estimate than a vented dryer.

24/7

A PEACE OF MIND SALE

**24 Hours 7 Days a Week Customer Support**

**T** 1.888.936.7872 **W**www.fisherpaykel.com